Amiad USA, Inc.
120 Talbert Road, Suite J
Mooresville, NC 28117

Tel: 704.662.3133
Fax: 704.662.3155
Toll Free: 800.243.4583

E-mail: infousa@amiad.com
Web: www.amiadusa.com

SAF Pre-Engineered HVAC Filter Skids

Installation, Operation and Maintenance Instructions

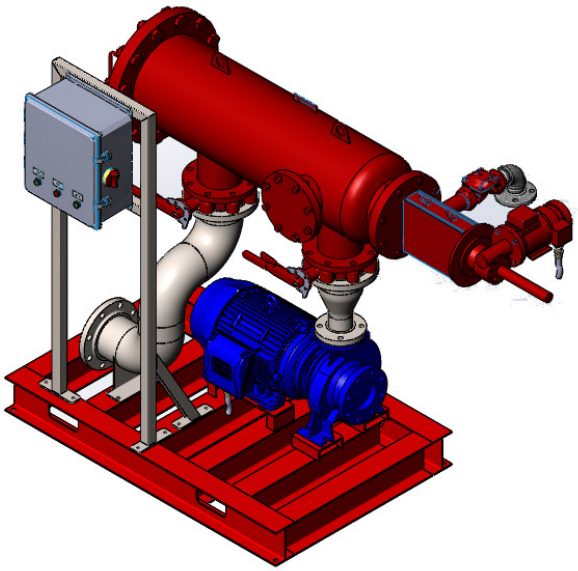

Disclaimer:
This document and the information enclosed within it contain restricted and/or privileged information that are intended only for usage by authorized Amiad technicians. If you are not a qualified Amiad technician you must not take any action in reliance on this document, unless permitted by Amiad.
None of the procedures provided in this file may be used in any form or by any means without permission from Amiad.
If you received this file in error, please notify Amiad immediately.
The confidential nature of and/or privilege in the file enclosed is not waived or lost as a result of a mistake or error in this file.
Amiad accepts no liability whatsoever, whether it was caused by:

1. Accessing or other related actions to this file.
2. Any links, procedures or materials provided/attached to this file.

Amiad assumes that all users understand risks involved within this file and/or its attached materials.

All the procedures, drawings, pictures and/or any other information provided in this document are presented as general information only; they can be altered, removed or changed without any further notice by Amiad.
This document does not replace any certified drawing, procedure or information provided by Amiad in reference to a specific customer, site or project.

Table of Contents

GENERAL SYSTEM TECHNICAL DATA

General System Specifications

										GPM/Gallons		Weight lbs.		
MODEL	**Flow Rate (gpm)**	**SAF Filter**	**Surface Area (in.^{2})**	**Pump HP**	**Voltage**	**FLA**	**PUMP Inlet**	**Face Pipe**	**Flush Line**	**Flush Flow (gpm)**	**Reject per Flush (gal.)**	**Filter**	**Shipping**	**Operation**
SAF 318	318	3000	465	10	230/460	11.8	3" FNPT	4"	2" FLG	48	17	809	909	1018
SAF 392	392	4500	697	15	230/460	16.8	3" FNPT	6"	2" FLG	66	22	1034	1134	1304
SAF 475	475	4500	697	20	230/460	23.7	4" FLG	6"	2" FLG	66	22	1161	1261	1466
SAF 565	565	6000	930	20	230/460	23.7	4" FLG	6"	2" FLG	110	74	1352	1452	1727
SAF 663	663	6000	930	20	230/460	23.7	4" FLG	6"	2" FLG	110	74	1352	1452	1727

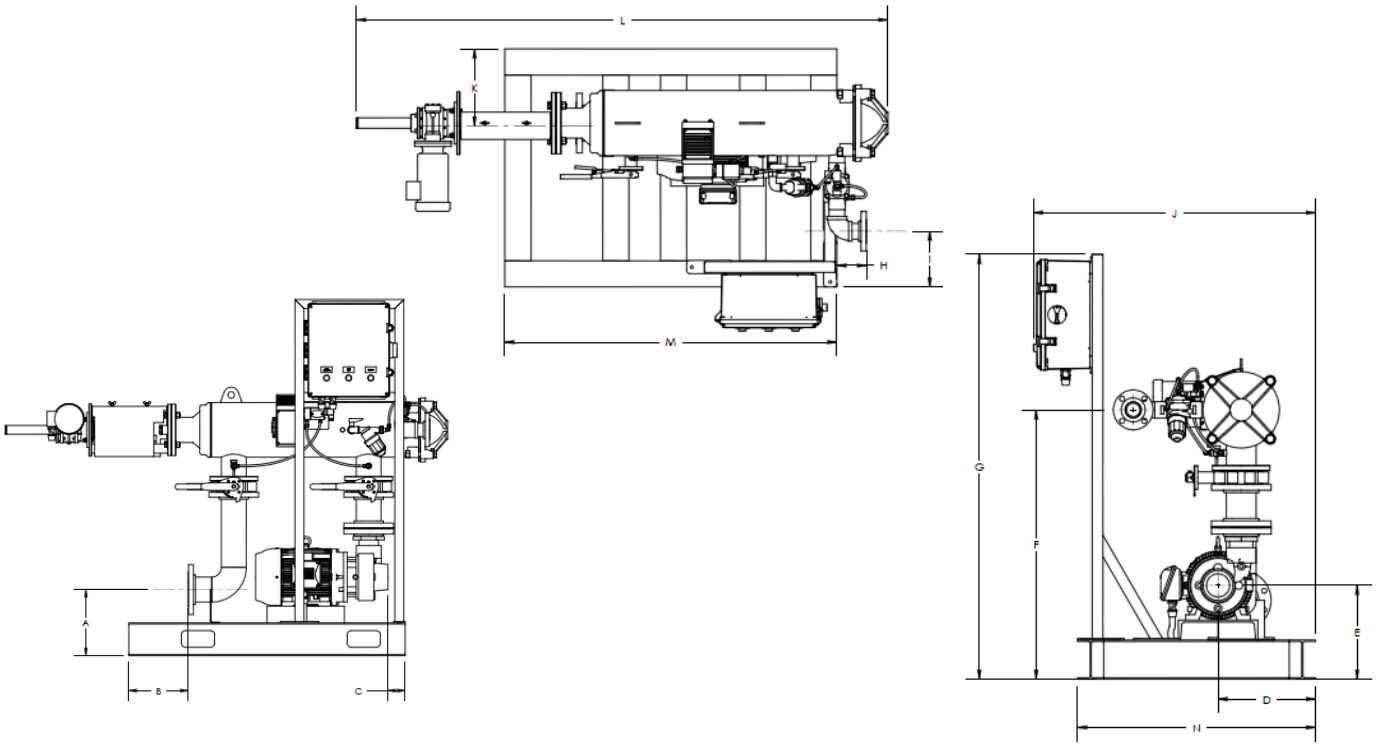

Dimensions (inches)

MODEL	A	B	C	D	E	F	G	H	I	J	K	L	M	N
SAF 318	11.875	10.75	3.125	14.687	14.125	40.687	64.125	4.437	8.375	42.562	11.187	80	50	35.875
SAF 392	11.875	8.875	13	17.937	14.125	43.875	64.125	5.796	3.5	51.375	13.312	91.875	60	35.875
SAF 475	11.875	13.312	6	11.687	14.875	44.5	64.125	7.375	1	52.937	11.6875	91.875	60	35.875
SAF 565	11.875	8.312	6	11.687	14.875	46.687	64.125	7.437	5.375	53	11.6875	86.312	55	35.875
SAF 663	11.875	8.312	6	11.687	14.875	46.687	64.125	7.437	5.375	53	11.6875	86.312	55	35.875

INTRODUCTION

Amiad filtration equipment has been designed to give long, trouble-free service when properly installed, operated and maintained. This manual contains important installation procedures and should be read prior to installing. This manual is also a guide for proper filter operation, maintenance and winterizing. It is important that maintenance personnel review this manual carefully, including the Safety Precautions and Warnings before performing any maintenance on this filter.

Note that the recommendations on the frequency of service are minimums, and where operating conditions are severe, the service should be performed more often. For each required service, follow the procedures outlined under the Maintenance Procedures section in this manual. If additional information beyond the scope of this manual is required, contact your local Amiad Representative or the factory.

SAFETY INSTRUCTIONS

General

1. Prior to installation or work on the filter, please read the installation and operation instructions, carefully.
2. While working on the filter, please observe all conventional safety instructions in order to avoid danger to the workers, the public or nearby property.
3. Please note: the filters may enter a self-cleaning cycle automatically, without prior warning.
4. No changes or modification to the equipment are permitted without express authorization from the manufacturer or its representative. Changes will void warranty with no exception.

Installation

1. Install the filter according to the instructions in this manual.
2. Leave enough clearance for easy access to all components and safe maintenance operations.
3. Electric wiring should be performed by an authorized electrician only, using standardized and approved components.
4. Install a main power cut-off switch close to the control panel.
5. If the control panel cannot be seen from the filter(s), a power cut-off switch should be installed near each filter unit.
6. The filter should be installed in a manner that avoids splashing water on the electrical components or the control panel.
7. Extra safety devices should be installed on hot water applications to avoid scalding.

Operation, control and maintenance

1. Disconnect the filter from power supply before maintenance or working on the unit(s).
2. Release pressure from the unit(s) before loosening or unscrewing bolts.
3. Try to keep the work area as dry as possible to prevent mishaps, possible electrocution or damage to the equipment caused by moisture.
4. Always open and close valves slowly and gradually.
5. Remove grease and fat material residues in order to avoid slipping.
6. Always re-assemble the safety covers of the drive mechanism.
7. When using a high pressure water or steam cleaner to clean a screen manually, follow the device's operation and safety instructions carefully.
8. When using acid or other chemical agents to clean a screen manually, follow the appropriate safety instructions provided by the chemical manufacturer.

Use of lifting equipment

1. While using lifting equipment, make sure that the filter or the lifted part is chained securely and in a safe manner.
2. Avoid working below lifted equipment.
3. Wear a safety helmet while working around lifted equipment.

DESCRIPTION OF FILTER OPERATION

Filtering process:
The SAF series HVAC filter system is a sophisticated yet easy-to-operate automatic filter, with a self-cleaning mechanism driven by an electric motor. The filter system is also equipped with pump, control panel, isolation valves, and check valve all installed on a skid. The SAF filter system is designed to work with various types of screens in filtration degrees from 10 to 500 micron (HVAC STD is 50 micron).

The water enters through the pump inlet into the filters coarse screen from outside in, and through the fine screen from inside out. The "filtration cake" accumulates on the fine screen surface and causes pressure differential to develop.

The coarse screen is designed to protect the cleaning mechanism from large dirt particles and is not cleaned automatically. Usually, it does not accumulate large quantities of suspended solids that will inhibit system flow.

Self-cleaning process:
The SAF series HVAC system initiates the self-cleaning process when either the pressure differential across the screen reaches a pre-set value (typically 7 psi) or the flush timer reaches its preset timed interval.

The fine screen filter element is cleaned by the suction scanner with spring loaded nozzles, which rotates in a spiral movement while removing the filtration cake from the screen, and expels it out through the exhaust valve.

A 2-way (fwd/rev) drive unit that is attached to the scanner by a threaded shaft rotates the scanner and provides the linear motion to clean the screen.

The hydraulic exhaust valve is activated for the duration of the cleaning cycle by a 3-way solenoid. During the 20 seconds self-cleaning process, filtered water continues to flow downstream of the filter.

System Operation modes:
The filtration system may be found in one of the following modes:

1. **Filtering mode:** This is the normal operating status. The flush mode is idle and the power light on the control board is lit.
2. **Self-cleaning mode:** The motor and exhaust valve are activated according to the previously described self-cleaning process.
3. **Malfunction mode:** If the filter malfunctions, the self-cleaning operation stops and the malfunction light on the control board is turned on.

The filtration system enters a malfunction mode under any of the following conditions:

1st. A continuous signal from the pressure differential switch longer than the PD fault time-out (default value=15 minutes) indicates that the filter is unable to clean itself.

2nd. The pump or drive motor Over Load Protector was activated, either manually or due to actual over load.

3rd. Limit Switch malfunction – usually, simultaneous activation of both limit switches.

Initiation of self-cleaning:
The filter initiates the self-cleaning process under any one of the following conditions:
1. Pressure differential (PD) – The Pressure Differential Switch (PDS) closes a free potential contact signal when the pressure differential across the screen reaches the pre-set value (usually 0.5 bar =7 psi). The control board registers the signal and activates the self-cleaning cycle.
2. Test - Manually pressing the "TEST" push button on the control board door activates a single self-cleaning cycle.
3. Timed – The timer in the control panel activates the self-cleaning cycle at time intervals, regardless of the pressure differential. The timer resets after every cycle. The PD mode is active in this mode as well.

INSTALLATION

Design recommendations:
1. The filter should be selected for 5% - 10% of the condenser water flow for side stream operation.
2. The filter should be placed as close as possible to connection points.
3. It is best to clean the tower and piping system prior to installation of the filter.

Installation instructions:
1. Install the filter in a manner that will allow convenient access and enough space to dismantle the filter for maintenance purposes.
2. Check the direction of flow according to the arrows marked on the filter housing.
3. It is recommended to install isolation valves on the inlet of the system for pump service.
4. The exhaust line (minimum 2" diameter) should be designed so that it creates minimal resistance to flow of 33 US gpm.
5. If the system is designed to operate with working pressures higher than 85 psi, it is recommended that a manual throttling valve will be installed on the exhaust line, in order to enable regulation of the self-cleaning flow rate.
6. The user should arrange suitable lighting at the area of the filter to enable good visibility and safe maintenance.
7. The user should arrange suitable platforms and safety barriers to enable easy access to the filter without climbing on pipes and other equipment.

IMPORTANT!!
- Prevent static back-pressure or reverse flow through the filter.

Electric wiring
1. The control panel is already installed on your system. The panel is set-up for single point connection for ease of installation. Please review the electrical panel drawing for your system for connection points. Only properly trained personnel should be used to make electrical connections with proper safety procedures.

Start-up and first operation
1. Make sure all the electric wiring is correct, according to your system's wiring schematic.
2. Switch ON the control & 24V circuit breakers and the motor overload protector. The motor will start operating.
3. ***CHECK ROTATION:*** *The suction scanner shaft should turn clockwise (CW) and move towards the filter housing until it reaches limit switch "A". If the motor rotates in the opposite direction (CCW),* ***turn off the electricity immediately*** *and change the direction of the motor rotation by changing between two phases. See Image A on next page.*
4. The motor must stop when the limit switch plate reaches limit switch "A" (opening the normally closed circuit).
5. Operate a "dry" self-cleaning cycle by pressing on the "TEST" push button. Check that the self-cleaning cycle runs as described in the "Self-cleaning process" paragraph on the previous page.
6. Open the inlet valve to the filter, leaving the outlet valve closed and operate a self-cleaning cycle. Doing this will also allow air to be evacuated from the system and prevent pump cavitation once started.

7. Check that the exhaust valve opens and all stages of the self-cleaning cycle perform properly. Attend to leakage, if any.
8. Close the 1/4" valve at the low pressure sensing port of the pressure differential switch for 5 seconds. The PDS indicator will move to the red area and the filter will start the self-cleaning cycle. **Re-open** the 1/4" valve.
9. Open the outlet valve and operate the filter under the designed hydraulic conditions by starting the pump.
10. Set the self-cleaning intervals according to the site needs. Consult with your Amiad representative if you have questions about the recommended setting.
11. Check and re-tighten all bolts after the first week of operation.

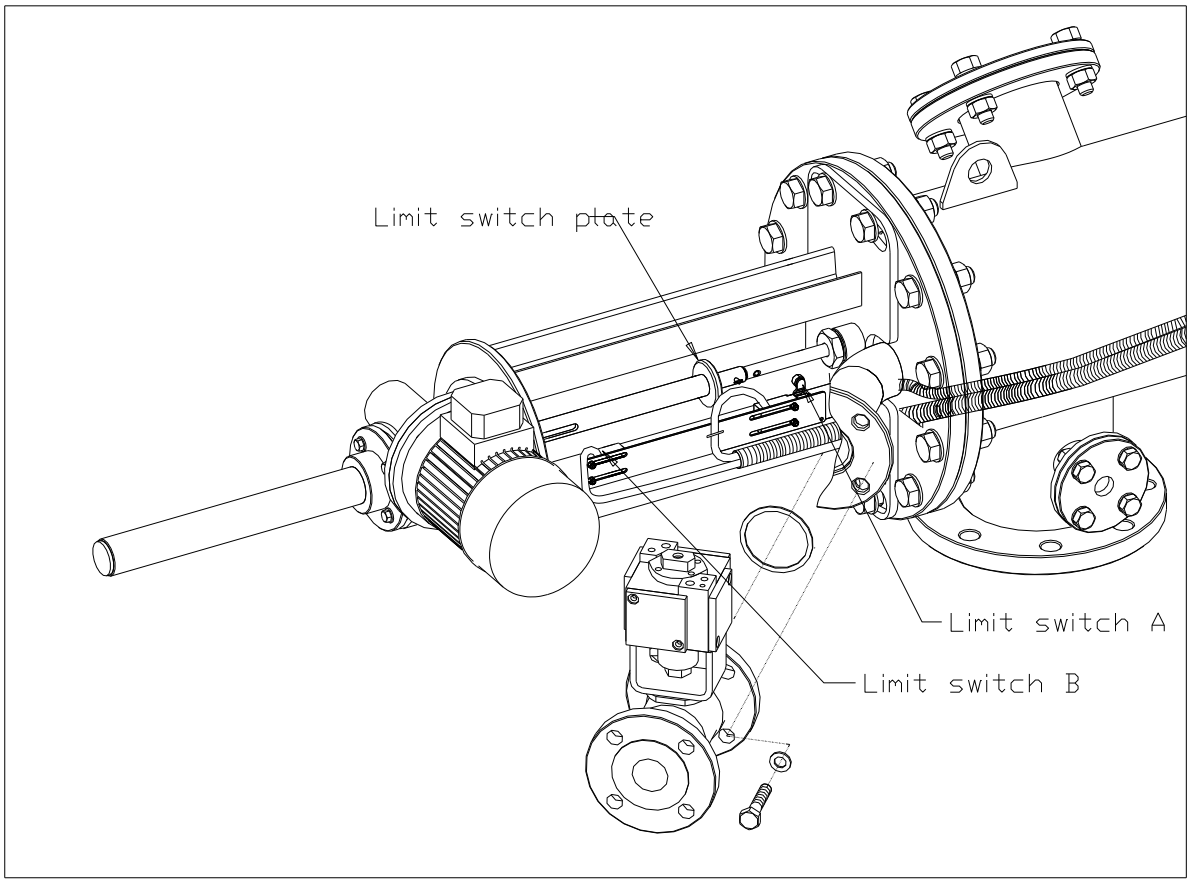

Image A. Limit switch locations.

MAINTENANCE

General inspection
Initiate a self-cleaning cycle by closing the 1/4" valve at the low pressure sensing port of the pressure differential switch for 5 seconds. Check that the exhaust valve opens, that the scanner moves properly, and when it reaches the limit switch – verify that the exhaust valve closes.

Weekly maintenance:

1. Perform a general inspection as described above.
2. Clean the 3/4" filter connected to the exhaust solenoid. (Close the 3/4" valve and activate a self-cleaning cycle in order to release pressure and then unscrew the filter lid).
3. Check that grease is sufficiently applied on the drive shaft and drive bushing. Add grease if necessary.
4. Check for any leakage from the scanner shaft. If necessary, replace the tightening nut's internal seal (7.7).

Replacing the tightening nut's internal seal: SAF 3000

1. Close the inlet valve to the filter and release the pressure.
2. Remove the cover (23) from the drive shaft housing (7) by unscrewing the wing nuts (23.6).
3. If the Suction Scanner is in the outer position, operate a self-cleaning cycle and bring it to the inner position.
4. Remove the split pin (10.2) and pull out the connecting pin (10.1).
5. Operate a self-cleaning cycle.
6. Power down the unit when the drive shaft is half way through its cycle. The drive shaft is now separated from
   the suction scanner.
7. Unscrew the sealing nut (7.5).
8. Remove the used internal O-ring and clean the O-ring seat.
9. Insert a new O-ring (7.7)
10. Apply some grease on the external O-ring and on the shaft.
11. Tighten the sealing nut (7.5).
12. Re-connect the drive shaft to the suction scanner shaft.
13. Operate the control board and open the filter inlet valve.

Replacing the tightening nut's internal seal: SAF 4500

1. Close the inlet valve to the filter and release the pressure.
2. Remove the cover (35) from the drive shaft housing (14) by unscrewing the wing nuts.
3. If the Suction Scanner is in the outer position, operate a self-cleaning cycle and bring it to the inner position.
4. Remove the split pin (20) and pull out the connecting pin (19).
5. Operate a self-cleaning cycle.
6. Power down the unit when the drive shaft is half way through its cycle. The drive shaft is now separated from
   the suction scanner.
7. Unscrew the sealing nut (38).
8. Remove the used internal O-ring and clean the O-ring seat.
9. Insert a new O-ring (40)
10. Apply some grease on the external O-ring and on the shaft.
11. Tighten the sealing nut (38).
12. Re-connect the drive shaft to the suction scanner shaft.
13. Operate the control board and open the filter inlet valve.

Replacing the tightening nut's internal seal: SAF 6000

1. Close the inlet valve to the filter and release the pressure.
2. If the Suction Scanner is in the outer position, operate a self-cleaning cycle and bring it to the inner position.
3. Remove the Split pin (13) and pull out the connecting pin (12).
4. Operate a self-cleaning cycle.

5. Stop the motor operation when the drive shaft reaches half way of its movement. The drive shaft is now
   separated from the Suction Scanner.
6. Unscrew the sealing nut (5).
7. Remove the used internal O-ring and clean the O-ring seat.
8. Insert a new O-ring (20)
9. Tighten the sealing nut (5).
10. Re-connect the drive shaft to the suction scanner shaft.
11. Operate the control board and open the filter inlet valve.

Maintenance prior to long period shutdown (preparations for long period shutdown):
The following must be done if the filter will not be in operation for longer than a month.
1. Perform a self-cleaning cycle (If possible, with a closed downstream valve).
2. Release pressure from the filter.
3. Power down the unit when the drive shaft is half way and none of the limit switches is pressed.
4. Disconnect the power supply to the control board.
5. Grease the drive shaft and the drive bushing.
6. Clean the 3/4" control filter.
7. Clean the coarse screen.

Maintenance prior to renewing filter operation:
1. Connect the control board to the power supply.
2. Check proper operation of the filter, especially noting proper rotation.
3. Grease the drive shaft and the drive bushing.
4. If necessary, replace the tightening nut's internal seal.

IMPORTANT!!
THE DRIVE SHAFT MUST BE LUBRICATED WITH HEAVY-DUTY, WATER RESISTANT GREASE. (SHELL, DARINA EP-2 OR SIMILAR).

Cleaning the coarse screen:
1. Close the filter inlet valve.
2. Release pressure from the filter by performing a self-cleaning cycle.
3. Remove the service lid.
4. Clean the coarse screen:
   - To remove large particles, insert your hand into the coarse screen area.
   - To remove fine particles and organic matter rinse the screen.

TROUBLESHOOTING

Before beginning any troubleshooting, carefully read the safety instructions chapter of this document and make sure that all the workers at the site are fully aware of and comply with these and any other local safety instructions.

The filtration system may enter a malfunction mode in the following cases:

Symptom	Remarks and Actions
Fault due to continuous signal from the pressure differential switch for duration of more than 15 minutes. The fault indication lamp is lighted in red.	This fault means that the self-cleaning process is not successful. This fault may be caused by one of the following reasons: A. The filter is clogged due to heavy dirt load or too high water flow rate. ○ Close the filter's downstream valve. ○ Press the reset button to reset the fault mode. The fault indication lamp is turned off. ○ Perform few consecutive manual self-cleaning cycles and monitor the PD signal. ○ Once the filter is clean gradually open the downstream valve and monitor the PD and the flow-rate. Make sure that the filter doesn't exceed its designated flow-rate. B. The PD switch is faulty. ○ Ask your qualified electrician to check the PD connections and operation. ○ Replace the switch if found faulty.
The motor protector was activated. The fault indication lamp is blinking in red.	This fault means that the motor was operated under too high load. Note: All the following checks and actions should be done by a qualified electrician only. A. Check the motor power consumption when not loaded. B. Check the limit switches for correct operation and verify that each one of them stop the motor at its designated point. C. Verify 3 phase power to the control board and the motor. D. Disconnect the drive unit from the suction scanner shaft and verify free turning of the suction scanner Note: If during this fault a request for self-cleaning is received (Manual, Time or DP) the blinking lamp switches to constant red.
Malfunctioning limit switches The fault indication lamp is blinking in red	Faulty limit switch may not stop the motor at the right point and therefore the motor protection may be activated. Receiving signal from both limit switches at the same time causes fault. A. Check that the limit switches are not mechanically stuck. B. Ask your qualified electrician to check the wiring and the functionality of the limit switched. Note: If during this fault a request for self-cleaning is received (Manual, Time or DP) the blinking lamp switches to constant red.
The fault indication lamp is blinking in red after the reset button is pressed	This means that the mechanical/electrical fault still exists. (Overload or Limit Switches fault)

DISMANTLING AND ASSEMBLING THE FILTER COMPONENTS OF THE SAF-3000

Prior to opening the filter perform a self-cleaning cycle by pressing the "TEST" push button.

The screens

Dismantling:

1. Close the filter inlet and outlet valves and release the pressure by performing a self-cleaning cycle. Power down the control board.
2. Unscrew the lid bolts (1.5) and remove the lid (1).
3. Pull out the flush chamber (2) with its seal (2.1).
4. Pull out the coarse screen (3) and clean it if necessary.
5. Pull out the upper cylinder seal (4.2).
6. Pull the fine screen (4) from the filter housing.
7. If required, remove the lower screen seal (4.3).

Assembly:

1. Mount the lower screen seal (4.3) on the fine screen.
2. Insert the screen into the filter housing (6) with the support legs pointing upwards. After pushing the screen all the way in, rotate the screen so that it sits on the support legs. Jiggle the screen until the locking pin (on the inner side of the housing wall) seats in the slot on the centering ring (4.1).
3. Insert the cylinder seal (4.2), so that its open side faces outward.
4. Clean and apply some grease on the suction scanner pipe and on the O-ring (2.3) of the suction scanner bearing (2.2), located in the flush chamber.
5. Insert the coarse screen (3) in its position, so that it rests on its supports.
6. Insert the flush chamber (2), make sure the seal is on top of the chamber's centering ring with its open side facing inward. The installation should be done at a slight angle and in circular motion.
7. Assemble the lid on the filter housing. Tighten the bolts (1.5) evenly.
8. Open the filter inlet valve first and then open the outlet valve. Turn on the control board.
9. Check proper operation of the filter.

The suction scanner:

Dismantling:

1. Close the filter's inlet valve, release the pressure and disconnect power supply from the control board.
2. Remove the cover (23) from the drive shaft housing (7) by unscrewing the wing nuts (23.6).
3. Remove the Split pin (10.2) and pull out the connecting pin (10.1).
4. Begin the screen dismantling procedure as described above.
5. Pull the suction scanner (5) with a spiral motion from the filter housing.

Assembly:

1. Apply some grease on the smooth side of the suction scanner shaft (5.2) and insert it through the filter housing.
2. Insert the end of the suction scanner shaft (5.2) into the drive shaft (10) and align the holes.
3. Insert the connecting pin (10.1) through the holes of the two shafts and lock it with the split pin (10.2).
4. Continue to assemble the screen as described above.

The drive shaft housing:

Dismantling:

1. Close the filter's inlet valve, release the pressure and disconnect power supply from the control board.
2. Dismantle the suction scanner and screens as described above.
3. Remove the limit switch sling (8) from the drive shaft housing by unscrewing the bolts (8.1). Carefully put the limit switch sling near the filter to avoid damaging the electrical wires.
4. Remove the drive unit (12) from the drive shaft housing (7) by unscrewing the nuts (12.7) from the bolts (12.3). Slide the drive unit off the shaft and make sure not to lose the drive shaft key (11).
5. Dismantle the drive shaft housing (7) from the housing flange (6) by unscrewing the bolts (7.1).

Assembly:

1. Verify that the O-ring (6.1) is clean and properly placed.
2. Tighten the bolts (7.1) to secure the flange of the drive shaft housing to the filter.
3. Insert the suction scanner (5), the fine screen (4) and the coarse screen as described previously.
4. Connect the drive shaft (10) to the scanner shaft using the connecting pin (10.1) and split pin (10.2).
5. Make sure the drive shaft key (11) is fitted properly in the gearbox. Slide the drive unit over the drive shaft and make sure that the drive shaft groove is aligned with the drive shaft key.
6. Connect the drive unit (12) to the drive shaft housing (7) with the bolts (12.3), and tighten them.
7. Assemble the limit switch sling (8) in its place. Make sure that the Limit Switch Plate is halfway between the two limit switches.
8. Power up the control board and make sure the filter is operating properly. **Check Rotation!**
9. Open the filter inlet valve first and then open the outlet valve and recheck filter operation.

PARTS SCHEDULE OF SAF-3000 WITH SPRING LOADED NOZZLES (SLN) - Section #1

NO.	CAT. NUMBER	DESCRIPTION
1	710103-002151	LID POLYESTER SAF-3000
1.1	770104-000089	HYDRAULIC SEAL AM-07 (POLYESTER LID)
1.3	760103-000070	FLAT WASHER M20 DIN125 ZINC PLATED C/ST
1.4	760102-000068	HEX NUT M20 ZINC PLATED C/ST DIN934
1.5	760101-000361	HEX BOLT PARTIAL THREAD M20X130 ZINC PLATED C/ST
2	700190-002332	FLUSHING CHAMBER (SAF-3000)
2.1	770104-000068	SEAL AM-01 FLUSHING CHAMBER SAF-3000+ACE
2.2	710103-002117	SUCTION SCANNER BEARING SAF-3000
2.3	770101-000040	O-RING 60X4 SAF-6000 FLUSHING CHAMBER NBR "S"
3	700101-000932	SAF-1500/3000 COARSE SCREEN
4	700101-XXXXXX	SAF-3000 SCREEN
4.1	710103-002095	SCREEN CENTERING RING SAF-3000
4.2	770104-000069	HYDRAULIC SEAL AM-02 HOUSING SAF-3000+ACE
4.3	770104-000080	SHAPED SEAL HYDRAULIC AM-05 8" MT. SCREEN NBR
5	700190-002386	SLN SCANNER ASSEMBLY (IMPROVED) - SAF 3000
6	710105-XXXXXX	HOUSING SAF-3000
6.1	770102-000168	O-RING P2-433 DRIVE UNIT ADAPTOR EBS/SAF NBR
6.3	760105-000026	SLOTTED PIN 10X30 DIN1481 S/ST304
6.4	760101-000444	HEX BOLT FULL THREAD M6X20 S/ST304 DIN933
6.5	760103-000094	FLAT WASHER M6 DIN125 S/ST316
6.6	760102-000085	HEX NUT M6 S/ST316 DIN934
7	710103-002074	INSTRUMENTATION COMBINED BRACKET SAF
7.1	710105-001021	DRIVE SHAFT HOUSING SAF-1500/3000 RED 3002
7.2	760101-000328	HEX BOLT PARTIAL THREAD M16X60 ZINC PLATED C/ST
7.3	760103-000069	FLAT WASHER M16 DIN125 ZINC PLATED C/ST
7.4	760103-000069	FLAT WASHER M16 DIN125 ZINC PLATED C/ST
7.5	760102-000067	HEX NUT M16 ZINC PLATED C/ST DIN934
7.6	710103-002162	TIGHTENING NUT SAF-1500/3000/4500
7.7	770101-000031	O-RING SEAL 24X3 TIGHTENING NUT SAF NBR "S"
7.8	770101-000027	O-RING SEAL 14X3 NBR "S"
7.9	710103-002233	DRIVE BUSHING SAF
7.1	760101-000447	HEX BOLT FULL THREAD M6X35 S/ST304 DIN933
7.11	760103-000094	FLAT WASHER M6 DIN125 S/ST316
7.12	760103-000094	FLAT WASHER M6 DIN125 S/ST316
8	760102-000101	NYLON INSERT LOCK NUT M6 S/ST304 DIN985
8.1	710103-002309	HD LIMIT SWITCH SLING SAF
8.2	760101-000444	HEX BOLT FULL THREAD M6X20 S/ST304 DIN933
8.3	760103-000094	FLAT WASHER M6 DIN125 S/ST316
8.4	760103-000094	FLAT WASHER M6 DIN125 S/ST316
9	760102-000085	HEX NUT M6 S/ST316 DIN934
9.1	720302-000004	LIMIT SWITCH NC (EBS,SAF) FA 4131-2DN
9.2	760101-000511	PHILLIPS PAN MACHINE SCREW M4X20 304
9.3	760103-000092	FLAT WASHER M4 DIN125 S/ST304
10	760102-000099	NYLON INSERT LOCK NUT M4 S/ST304 DIN985
10.1	710103-002164	DRIVE SHAFT SAF-1500/3000/4500
10.2	710103-002165	CONNECTING PIN SAF-1500/3000/4500
10.3	760105-000030	SPLIT PIN 1.6X12 DIN 94 S/ST316
10.4	710103-002308	LIMIT SWITCH PLATE SAF HD

NO.	CAT. NUMBER	DESCRIPTION
11	710103-002237	DRIVE SHAFT KEY SAF
12	720201-000030	DRIVE UNIT 440V AC 3PH 0.18KW RMI 50 1/28 63 B5
12.1	720203-000033	MOTOR 480V AC 50/60HZ 0.18KW 1400RPM IP56
12.2	720202-000019	GEAR RMI50 1/28 63
12.3	760101-000308	HEX BOLT FULL THREAD M8X40 ZINC PLATED C/ST
12.4	760103-000075	FLAT WASHER M8 DIN125 ZINC PLATED C/ST
12.5	760103-000075	FLAT WASHER M8 DIN125 ZINC PLATED C/ST
12.6	760103-000108	SPRING WASHER M5 DIN127 S/ST304
12.7	760102-000063	HEX NUT M8 ZINC PLATED C/ST DIN934
13	700190-002427	DRIVE SHAFT COVER (PVC) SAF
13.1	760101-000522	SOCKET HEAD CAP SCREW M8X20 S/ST304
14	730103-000467	HYDRAULIC VALVE 2" (GAL) RED
14	730103-000466	2" BERMAD HYDRAULIC VALVE (RAM) BSP RED
14.1	710103-000591	PRESSURE CHECK POINT CONNECTOR 1/4"X1/4" BRASS
15	720103-000177	SOLENOID VALVE 24VAC,50HZ,NO (GEM-SOL)
15	720103-000182	SOLENOID VALVE 24VAC NO ASCO RED HAT
15.1	720501-000202	L-CONNECTOR 5/16"X1/4" 69F BRASS
15.2	720502-000022	CONTROL TUBE 5/16" PA AIR BRAKE W/INSERTS
15.3	720501-000206	CONNECTOR 5/16"X1/4" 68F BRASS
15.4	720501-000204	L-CONNECTOR 5/16"X1/8" 69F NICKEL PLATED
15.4	720501-000202	L-CONNECTOR 5/16"X1/4" 69F BRASS
16	010000-000042	3/4" BSPT AC BLACK SCREEN 200 MIC
16.1	710103-002570	RACCORD NUT 3/4" FOR 3/4" FILTER
16.2	710103-002569	RACCORD NIPPLE 1/4" FOR 3/4" FILTER
16.3	720501-000202	L-CONNECTOR 5/16"X1/4" 69F BRASS
16.4	720502-000022	CONTROL TUBE 5/16"PA AIR BRAKE W/INSERTS
16.5	770102-000082	O-RING SEAL P2-112 NBR "S"
17	780101-000789	L-CONNECTOR 3/4" F/M GALVANIZED
18	730104-000220	BALL VALVE 3/4" M/F (BRASS/NI)
19	720104-000028	PD SWITCH MIDWEST
19.1	720501-000213	CONNECTOR 5/16"X1/8" 68F BRASS
19.2	720501-000204	L-CONNECTOR 5/16"X1/8" 69F NICKEL PLATED
19.3	720502-000022	CONTROL TUBE 5/16" PA AIR BRAKE W/INSERTS
19.4	720501-000202	L-CONNECTOR 5/16"X1/4" 69F BRASS
19.5	760101-000545	SOCKET SET SCREW M6X25 S/ST304 DIN916
19.6	760102-000085	HEX NUT M6 S/ST316 DIN934
19.7	760103-000109	SPRING WASHER M6 DIN127 S/ST316
19.8	760103-000094	FLAT WASHER M6 DIN125 S/ST316
20	700190-002336	MANOMETER VALVE 1/4" W/ DRAIN
20.1	720501-000206	CONNECTOR 5/16"X1/4" 68F BRASS
20.2	720502-000022	CONTROL TUBE 5/16" PA AIR BRAKE W/INSERTS
21	700190-002421	ELECTRICAL JUNCTION BOX (SAF)
22	700190-001306	PRESSURE CHECK POINT COMPLETE (STEEL)
23.1	760101-000450	HEX BOLT FULL THREAD M6X60 S/ST304 DIN933
23.2	760103-000094	FLAT WASHER M6 DIN125 S/ST316
23.3	760103-000094	FLAT WASHER M6 DIN125 S/ST316
23.4	760102-000085	HEX NUT M6 S/ST316 DIN934
23.5	760103-000094	FLAT WASHER M6 DIN125 S/ST316
23.6	760102-000107	WING NUT M6 S/ST304 DIN315

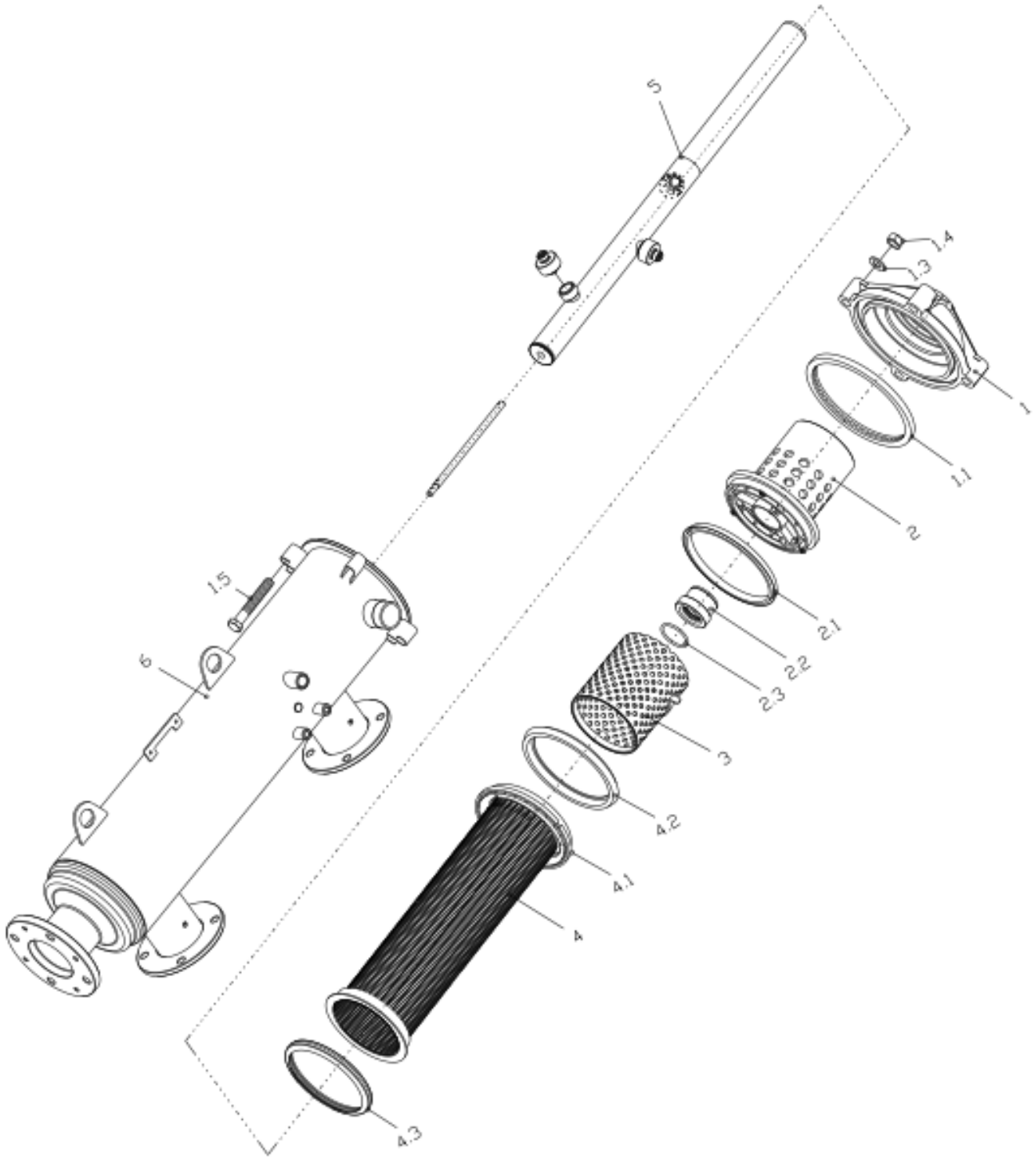
5
1.4
1.3
1
1.1
2
1.5
6
2.1
2.2
2.3
3
4.2
4.1
4
4.3

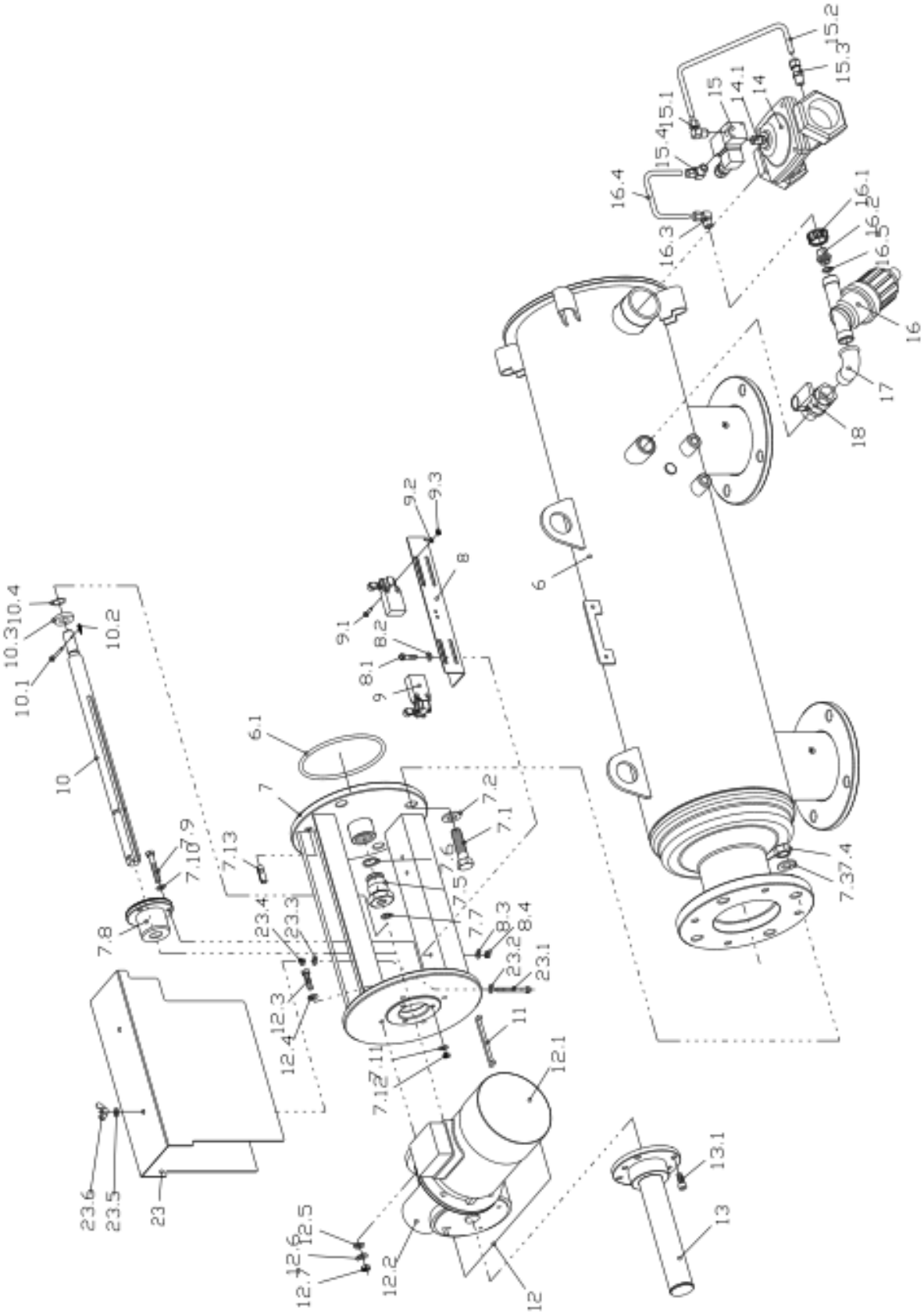
10.4
10.3
10.2
10.1
10
7.9
7.10
7.13
7.8
23.6
23.5
23
6.1
7
23.4
23.3
12.3
12.4
9.2
9.3
8
9.1
8.2
8.1
9
7.2
7.1
7.6
7.5
7.7
8.3
8.4
23.2
23.1
11
7.11
7.12
12.1
12.5
12.6
12.7
12.2
12
13.1
13
6
16.4
16.3
15.4
15.1
15
14.1
14
15.2
15.3
16.1
16.2
16.5
16
17
18
7.3
7.4

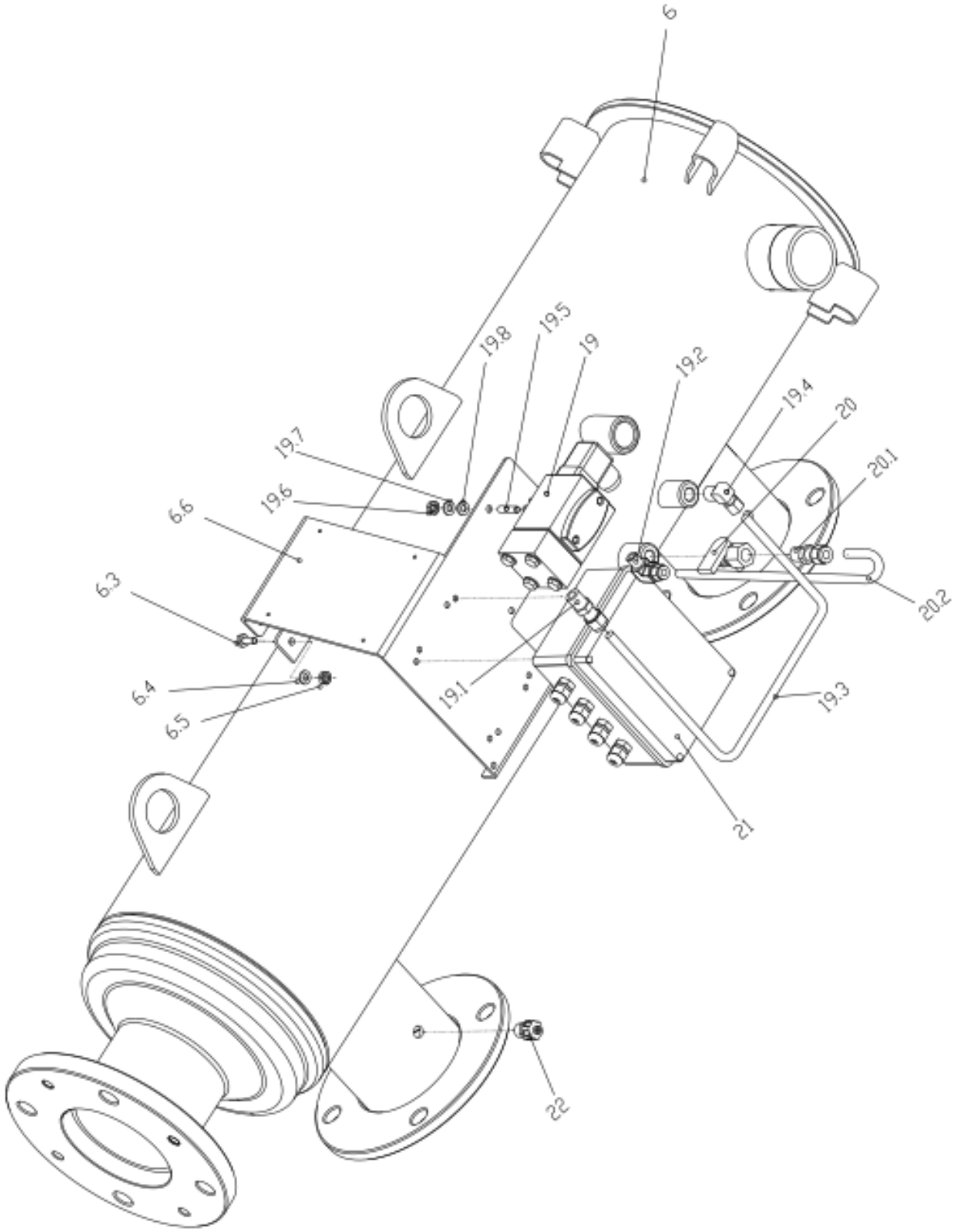

PARTS SCHEDULE OF SAF-3000 WITH SLN - Section #2

NO.	CAT. NUMBER	DESCRIPTION	QTY.	Material
1	710103-002153	SLN Suction Scanner Machined Improved SAF-3000	1	S/ST 316
2	710103-002103	SLN Spring Seat SAF-3000/4500	3	Delrin
3	710103-002104	SLN Cap SAF-3000/4500	3	HMPE
4	710103-002105	SLN Tightening Nut SAF-4500/3000	3	Delrin
5	710103-002106	SLN Body SAF-3000/1500	3	S/ST 316L
6	770104-000093	Spring Loaded Nozzle Seal - SAF (Blue)	6	ECOPUR
7	770102-000064	O-Ring Seal 2-016 NBR	3	NBR
8	760107-000049	Spring Loaded Nozz. Spring SAF-3000/4500	3	S/ST 302
9	710103-002125	Suction Scanner Shaft SAF-3000	1	S/ST 316L
10	710103-002501	Plug Threaded M8 for SAF-6000 PRO	1	Delrin
11	710103-002520	Connecting Pin (Shaft To Scanner)	1	S/ST 316

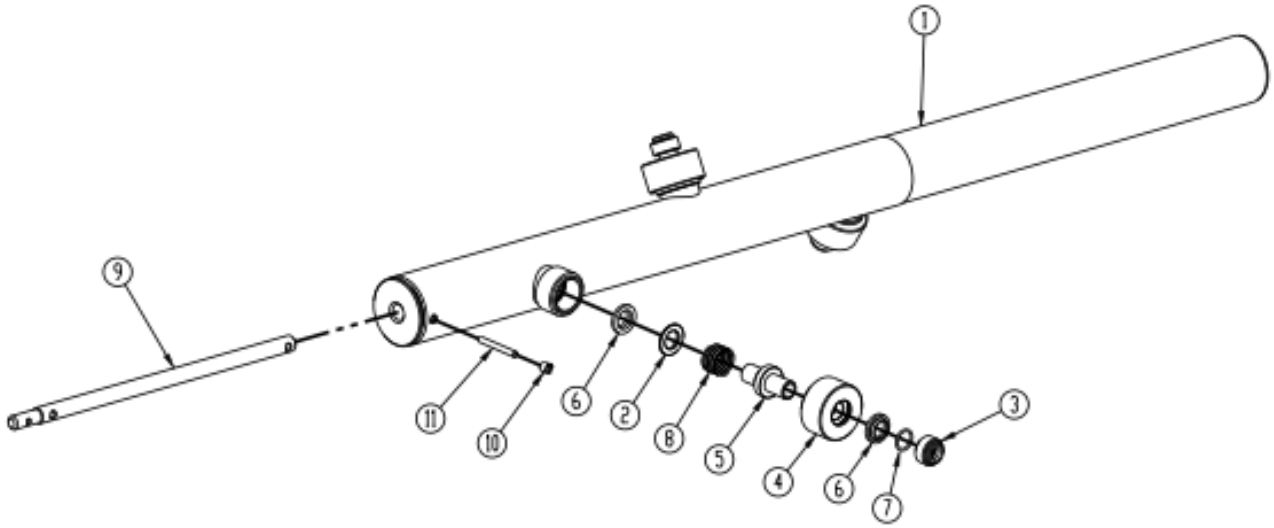

DISMANTLING AND ASSEMBLING THE FILTER COMPONENTS OF THE SAF-4500

Prior to opening the filter perform a self-cleaning cycle by pressing the "TEST" push button.

The fine screen

Dismantling:

1. Close the filter inlet and outlet valves and release the pressure.
2. Release the lid bolts (23) from their nuts and remove the lid (21).
3. Pull the screen (17) out of the filter housing.
4. Remove the screen seals (16) from the screen.

Assembly:

1. Put the screen seals (16) on the screen edges (17).
2. Insert the screen into the filter housing (1) while the support legs point upwards. After pushing the screen all the way in, rotate the screen so the legs will support it and lead it to its position.
3. Clean and apply some grease on the suction scanner pipe and on the o-ring of the lower bearing (4).
4. Assemble the lid on the filter housing. Make sure the screen and seal are correctly positioned in the lid seat.
5. Tighten the bolts (23) in a controlled and balanced method. The bolts seats of the lid should touch the bolts seats of the filter housing.
6. Open the filter inlet and outlet valves and operate the control board.
7. Check proper operation of the filter.

The suction scanner:

Dismantling:

1. Begin the fine screen dismantling procedure as described above.
2. Remove the cover (35) from the drive shaft housing (14) by unscrewing the wing nuts.
3. Remove the Split pin (20) and pull out the connecting pin (19).
4. Pull the suction scanner (18) in a spiral movement out of the filter housing.
5. Unscrew the sealing nut (38).

Assembly:

1. Apply some grease on the smooth side of the suction scanner (18) and insert it into the screen (17). Make sure the scanner (18) passes through the flushing chamber (3). When the suction scanner shaft appears from its port, apply some grease on it and tighten the sealing nut (38).
2. Insert the suction scanner shaft (2 on page 23) into the drive shaft (3 on page 22). Make sure the holes in the above shafts are parallel.
3. Insert the connecting pin (19) to the parallel hole of the suction scanner shaft and the drive shaft and lock it with the split pin (20).

The drive shaft housing and coarse screen:

Dismantling:

1. Close the inlet and outlet valves of the filter and release pressure.
2. Disconnect power supply from the control board.
3. Dismantle the suction scanner and fine screen as described previously.
4. Pull out the plug from the solenoid coil (60).
5. Remove the limit switch sling (6 – parts schedule section 2) from the drive shaft housing by unscrewing the bolts (14 – parts schedule section 2). Carefully put the limit switch sling near the filter to avoid any damage to the electrical wires.
6. Disconnect the tube (70) from the solenoid valve (60) and from connector (44).
7. Disconnect the drain pipe from the exhaust valve.
8. Remove the drive shaft cover (35) by unscrewing wing nuts.
9. Remove the drive unit (30) from the drive shaft housing (14) by unscrewing the nuts (33) from the bolts (31). By doing so the drive shaft key (29) will be pulled out.

10. Dismantle the drive shaft housing (14) from the flushing chamber flange (3) by unscrewing the bolts (15).
11. Remove the rest of the flange bolts and pull out the flushing chamber assembly which includes: flushing chamber (3), coarse screen (7), screens adapter (9) and screens adapter seal (10).

Assembly:
1. Place the coarse screen (7) in its seat in the flushing chamber.
2. Place the screens adapter (9) on the flushing chamber and the coarse screen.
3. Attach the screens adapter seal (10) to its place with its flat side, using some grease (as adhesive material).
4. Attach the flushing chamber o-ring (6) to its place using some grease (as adhesive material).
5. Apply some grease on the o-ring of the upper bearing (4).
6. Insert the flushing chamber assembly into its place. Use the centering pin to locate the flange in its position.
7. Tighten the flange to the filter housing with the side bolts only (11).
8. Apply some grease on the o-rings (39 & 40) of the shaft sealing nut (38) and tighten to its place.
9. Install the drive shaft housing, using the rest of the flange bolts (15).
10. Insert the suction scanner (18) and the fine screen (17) as described previously.
11. Connect the drive shaft (3 on page 22) to the scanner shaft using the connecting pin (19) and split pin (20).
12. Make sure the drive shaft key (29) is fitted properly in the gear box. Thread the drive shaft through the drive unit and make sure that the drive shaft groove is adjusted in accordance with the drive shaft key.
13. Connect the drive unit (30) to the drive shaft housing (14) with the bolts (31) and tighten them.
14. Connect the pilot tube between the solenoid valve (60) and the control filter connector (52).
15. Assemble the limit switch sling (6 on page 22) in its place and push in the plug of the solenoid coil.
16. Connect the drain pipe to the exhaust valve (68).
17. Operate the control board and make sure the filter is operating properly.
18. Open the inlet and outlet valves and recheck filter operation.

PARTS SCHEDULE OF SAF-4500 WITH SPRING LOADED NOZZLES (SLN) – Section 1

No.	CAT. No.	Description	Qty	Material
1	710105-******	SAF-4500 Housing Red	1	ST-37.2
2	760105-000026	Slotted Pin 10x30 DIN1481	1	S/ST 304
3	710105-001115	SAF-4500 Flushing Chamber,Red	1	ST-37.2
4	710103-002208	Suction Scanner Bearing (SAF-4500)	2	Delrin
5	760107-000051	Locking Spring RING (SST316)	2	S/ST 316
6	770101-000040	O-Ring 60X4 Flushing Chamber NBR	2	NBR
7	700101-000958	Coarse Screen SAF-4500	1	S/ST-316L
8	770102-000176	Parker Standard O-ring series P2-452	1	NBR
9	710105-001106	Coarse Screen Adaptor SAF-4500 Red	1	ST-37.2
10	770104-000091	Flushing Chamber Seal AM-10 (SAF-4500)	1	NBR
11	760101-000353	Hex Bolt Partial Thread M20X70 Z.PLT C/ST	4	Zinc Plated
12	760103-000070	Flat Washer M20 DIN125 Zinc Plated C/ST	20	Zinc Plated
13	760102-000068	Hex Nut M20 Zinc Plated C/ST DIN934	12	Zinc Plated
14	700190-002395	Drive Shaft House Assembly, Red SAF-4500	1	Various
15	760101-000355	Hex Bolt Partial Thread M20X80 Z.PLT C/ST	4	Zinc Plated
16	770104-000080	Hydraulic Seal AM-05	2	NBR
17	700101-******	Weavewire S/ST316 4500SQ.CM Screen /SAF4500	1	S/ST 316L
18	700190-002409	SLN Scanner Assembly (Improved) SAF-4500	1	Various
19	710103-002165	Connecting Pin (SAF-1500,3000, 4500)	1	S/ST 316
20	760105-000030	Split Pin 1.6X12 DIN94 S/ST316	1	S/ST 316
21	710105-001143	Lid (SAF-4500) Red	1	ST-37.2
22	770104-000090	Hydraulic Seal AM-08	1	NBR
23	760101-000360	Hex Bolt Full Thread M20X120 Z.Plated C/ST	4	Zinc Plated
24	710105-001152	SAF-4500 Service Port Lid Red	1	ST-37.2
25	770104-000083	Servic Port Lid Seal AM-12 (SAF-4500)	1	NBR
26	760101-000322	Hex Bolt Partial Thread M12X80 Z.PLT C/ST	3	Zinc Plated
27	760103-000077	Flat Washer M12 DIN125 Zinc Plated C/ST	3	Zinc Plated
28	760102-000065	Hex Nut M12 Zinc Plated C/ST DIN934	3	Zinc Plated
29	710103-002237	Drive Shaft Key (SAF)	1	Brass
30	720201-000030	Drive Unit SAF1500-4500 440VAC 3Ph 0.18KwX1400 RMI50 1/28 63 B5	1	Various
31	760101-000308	Hex Bolt Full Thread M8X40 Z.Plated C/ST	4	Zinc Plated
32	760103-000075	Flat Washer M8 DIN125 Zinc Plated C/ST	8	Zinc Plated
33	760102-000063	Hex Nut M8 Zinc Plated C/ST DIN934	4	Zinc Plated
34	760103-000085	Spring.W M8 DIN127 Zinc Plated C/St	4	Z.PLATED C/ST
35	710105-001189	Drive Shaft Housing Cover SAF1500 EPOXY PKPK-3002	1	ST.37-2
36	700190-002427	Drive Shaft Cover (PVC) SAF	1	PVC
37	760101-000522	Socket Head Cap Screw M8X20 S/ST304 DIN912	4	SST304
38	710103-002162	SAF-4500 Tightening Nut	1	Brass
39	770101-000027	O-Ring Seal 14x3 Nbr "S"	1	NBR
40	770101-000031	O-Ring Seal 24x3 (Tightening Nut SAF)Nbr"S"	1	NBR
41	710103-000591	Pressure Check Point Connector 1/4"X1/4"	3	Brass
42	700190-001305	Pressure Check Point Plastic W/O Nipple	2	Various
43	700190-002336	Manometer Valve 1/4" W/Drain	1	Brass
44	720501-000202	L-Connector 5/16"X1/4"	4	Brass
45	710103-002074	Insrtumentation Combined Bracket SAF	1	S/ST 304

No.	CAT. No.	Description	Qty	Material
46	700190-002421	Electrical Junction Box (SAF)	1	Various
47	700190-002618	Pressostat Sub-As. Midwest w/o Fitting & Electric Cable	1	Various
48	720501-000213	Connector 5/16"x1/8"	1	Brass
49	720501-000204	L-Connector 5/16"X1/8"	2	Brass
50	730104-000220	Ball Valve 3/4" M/F (BRASS)	1	Brass
51	780101-000789	L-Connector 3/4" F/M Galvanized	1	ST.37-2 Galvanized
52	700190-001159	Housing 3/4" (AC,Black) BSPT	1	PP
53	700101-000277	Molded Nylon 110SQ.CM S200MIC F/3/4"AC	1	Various
54	710101-000449	3/4" Bowl- Closed (AC,Black)	1	Acetal
55	710103-002569	Raccord Nipple 1/4" for 3/4" Filter	1	ABS-medium Impact
56	770102-000082	O-Ring Seal P2-112 NBR	1	NBR
57	710103-002570	Raccord Nut 3/4" for 3/4" Filter	1	ABS-medium Impact
58	730103-000466	2" Bermad Hydraulic Valve (RAM) BSP RED	1	ST.37-2
59	720501-000206	Connector 5/16"x1/4"	1	Brass
60	720103-000177	Solenoid Valve 24VAC,50HZ,No (Gem-Sol)	1	Various
61	760101-000531	Phillips Pan Machine Screw M5X16 304	4	SST304
62	760102-000084	Hex Nut M5 S/ST304 DIN934	4	SST304
63	760103-000093	Flat Washer M5 DIN125 S/ST304	4	SST304
64	760101-000444	Hex Bolt Full Thread M6X20 S/ST304 DIN933	2	SST304
65	760103-000094	Flat Washer M6 DIN125 S/ST316	4	SST316
66	760102-000085	Hex Nut M6 S/ST316 DIN934	2	SST316L
67	760103-000109	Spring Washer M6 DIN127 S/ST316	2	S/ST 316
68	900103-000020	Aluminum Amiad Nameplate, CE, EN	1	Aluminum
69	760105-000036	Rivet Blind 3x6 DIN7337 S/ST316	4	S/ST 316
70	720502-000036	Pipe 5/16" PA Air Brake	1	NYLON

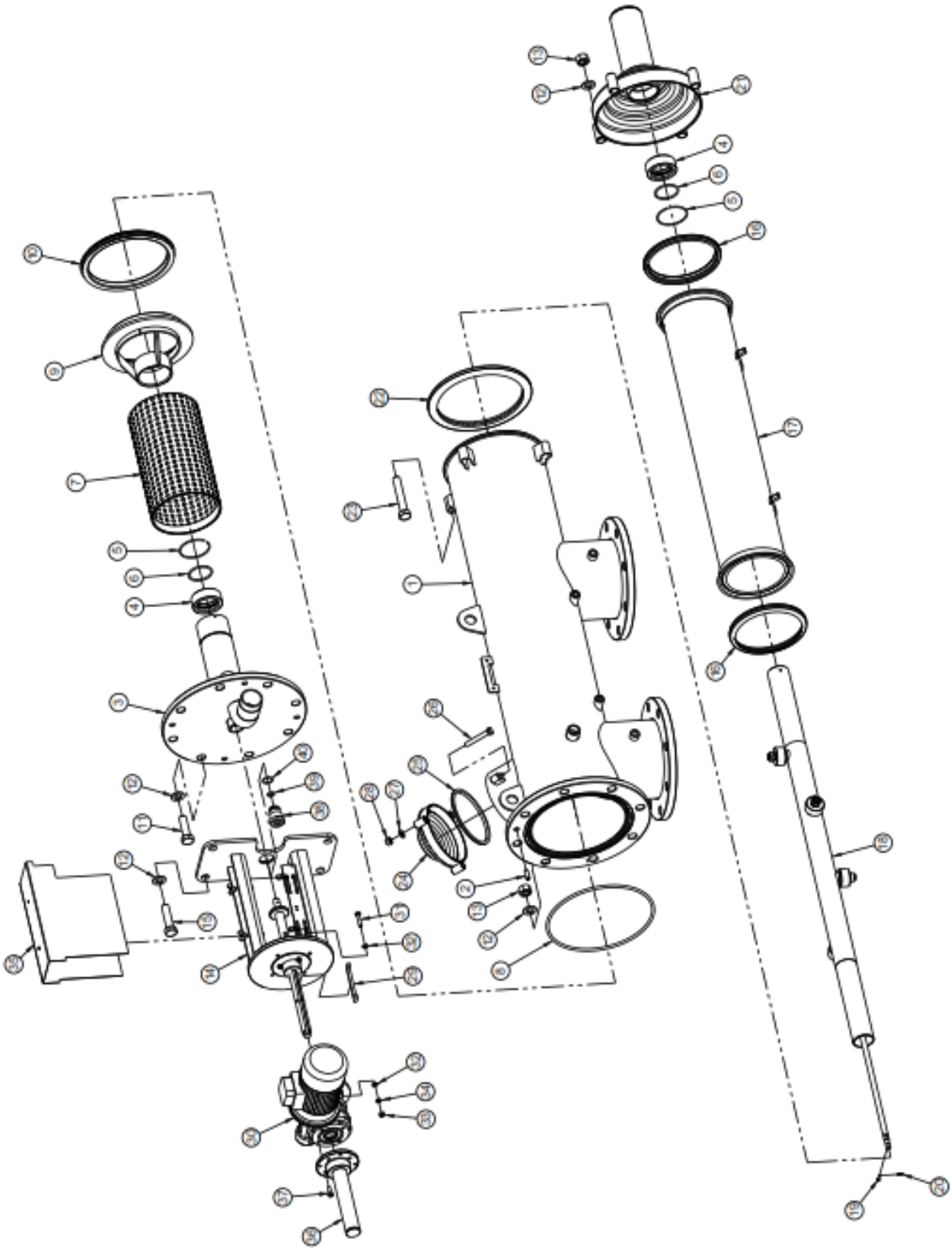

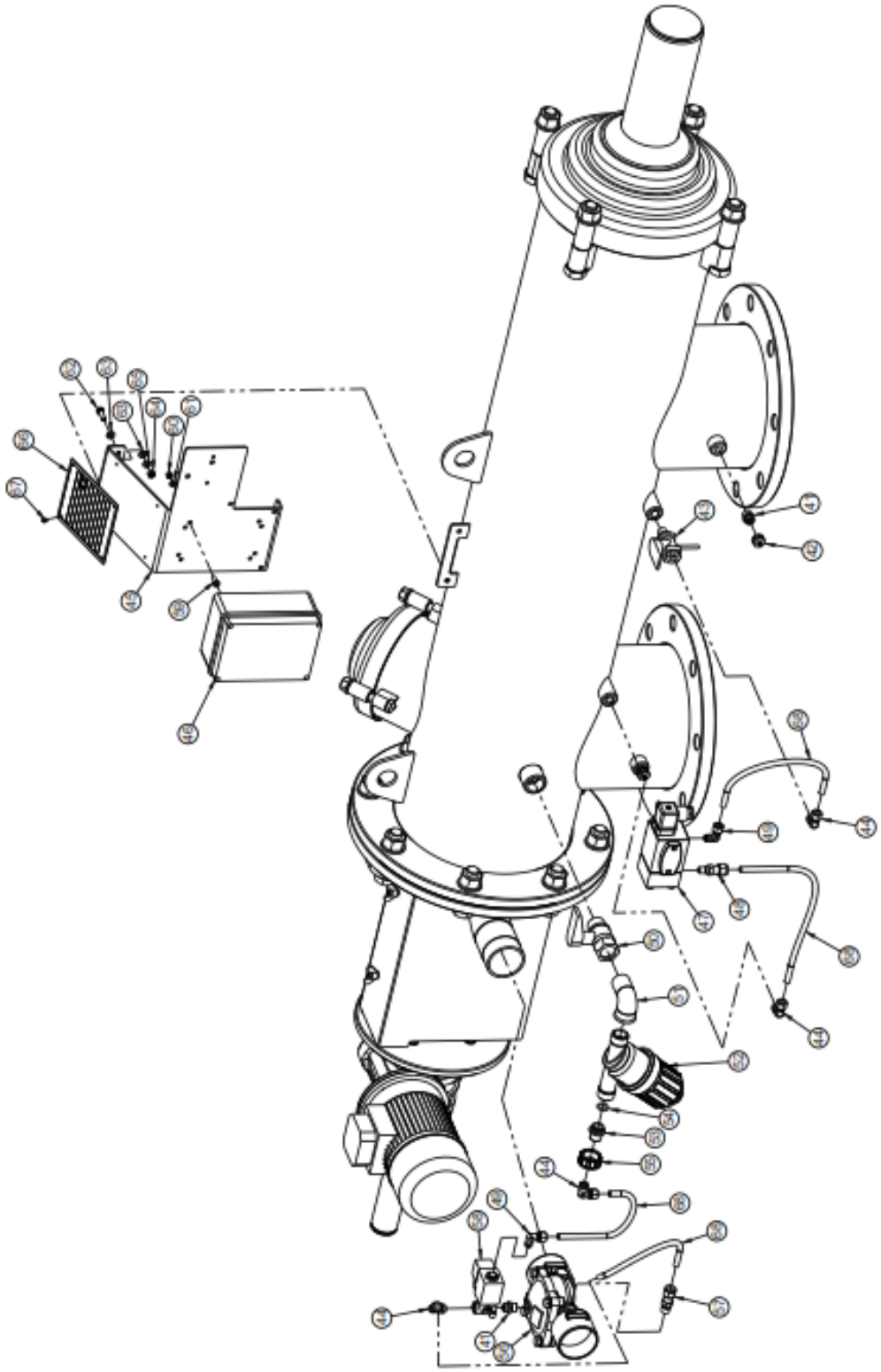

PARTS SCHEDULE OF SAF-4500 WITH SLN – Section 2

No.	CAT. No.	Description	Qty	Material
1	710105-001116	Drive Shaft House SAF-4500 Epoxy PKPK-3002	1	Various
2	710103-002233	Drive Bushing (SAF)	1	Brass
3	710103-002164	Drive Shaft (SAF-1500,3000,4500)	1	S/ST 316L
4	710103-002308	Limit Switch Plate (SAF) HD	1	S/ST 316L
5	760106-000022	Limit Switch Plate Locking Ring	1	S/ST 304
6	710103-002309	HD Limit Switch Sling (SAF)	1	S/ST 316L
7	720302-000004	Limit Switch NC (EBS,SAF) FA 4131-2DN	2	
8	760101-000511	Phillips Pan Machine Screw M4x20 DIN7985	4	S/ST 304
9	760103-000092	Flat Washer M4 DIN125 S/ST304	4	S/ST 304
10	760102-000099	Nylon Insert Lock Nut M4 S/ST304 DIN985	4	S/ST 304
11	760101-000447	Hex Bolt Full Thread M6x35 DIN933 S/St.316	3	S/ST 304
12	760103-000094	Flat Washer M6 DIN125 S/ST316	16	S/ST 316
13	760102-000101	Nylon Insert Lock Nut M6 S/ST304 DIN985	3	S/ST 304
14	760101-000444	Hex Bolt Full Thread M6x20 S/St304 DIN933	2	S/ST 304
15	760103-000109	Spring Washer M6 DIN127 S/ST316	2	S/ST 316
16	760102-000085	Hex Nut M6 S/ST316 DIN934	4	S/ST 316
17	760101-000450	Hex Bolt Full Thrd M6x60 S/St304 DIN933	2	S/ST 304
18	760102-000107	Wing Nut M6 304 DIN315	2	S/ST 304

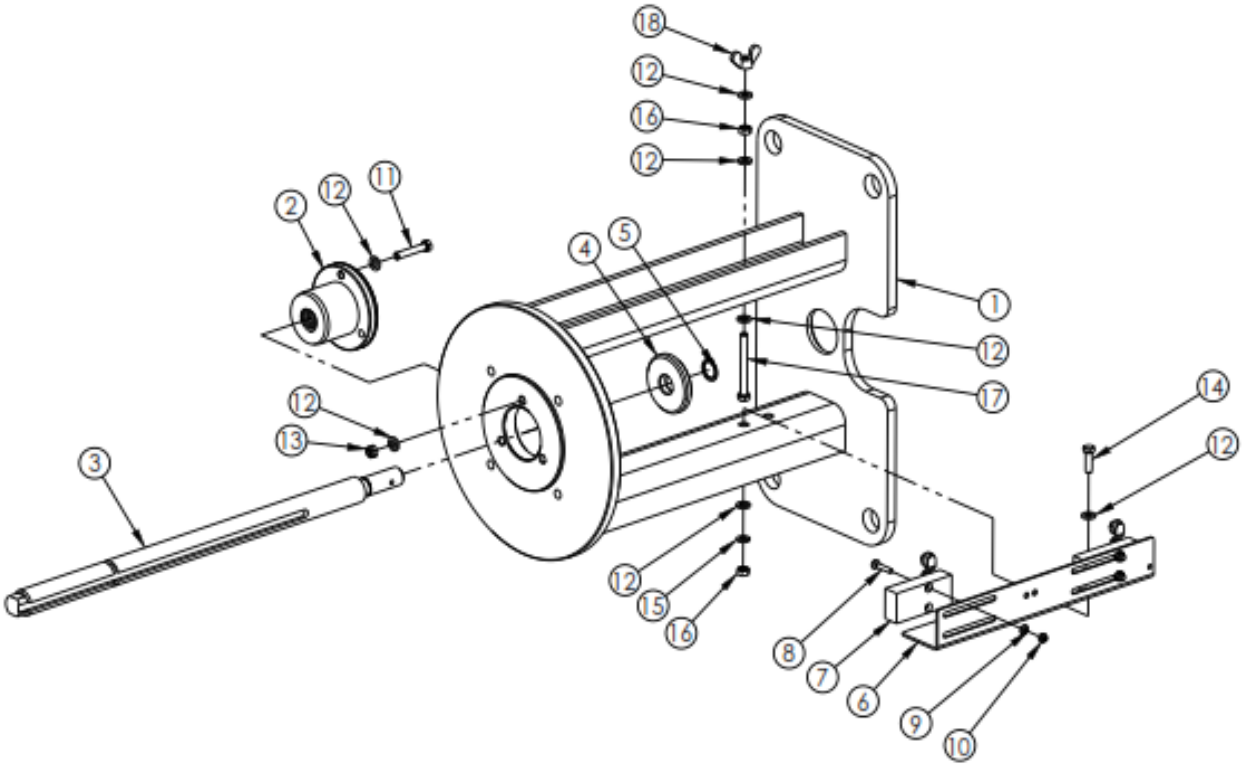

PARTS SCHEDULE OF SAF-4500 WITH SLN – Section 3

No.	CAT. No.	Description	Qty	Material
1	710103-002220	SLN Suction Scanner Improved SAF-4500 Machined	1	
2	710102-000833	Suction Scanner Shaft SAF-4500	1	
3	710103-002520	Connecting Pin (Shaft To Scanner)	1	S/ST 316
4	710103-002501	Plug Threaded M8 for SAF-6000 PRO	1	Delrin
5	710103-002104	SLN Cap SAF-3000/45000	4	HMPE
6	770102-000064	O-RING Seal 2-016 NBR	4	NBR
7	710103-002106	SLN Body SAF-3000/1500	4	S/ST 316L
8	770104-000093	Spring Loaded Nozzle Seal - SAF (Blue)	8	ECOPUR
9	710103-002105	SLN Tightening Nut SAF-4500/3000	4	Delrin
10	760107-000049	Spring Loaded Nozz. Spring SAF-3000/4500	4	S/ST 302
11	710103-002103	SLN Spring Seat SAF-3000/4500	4	Delrin

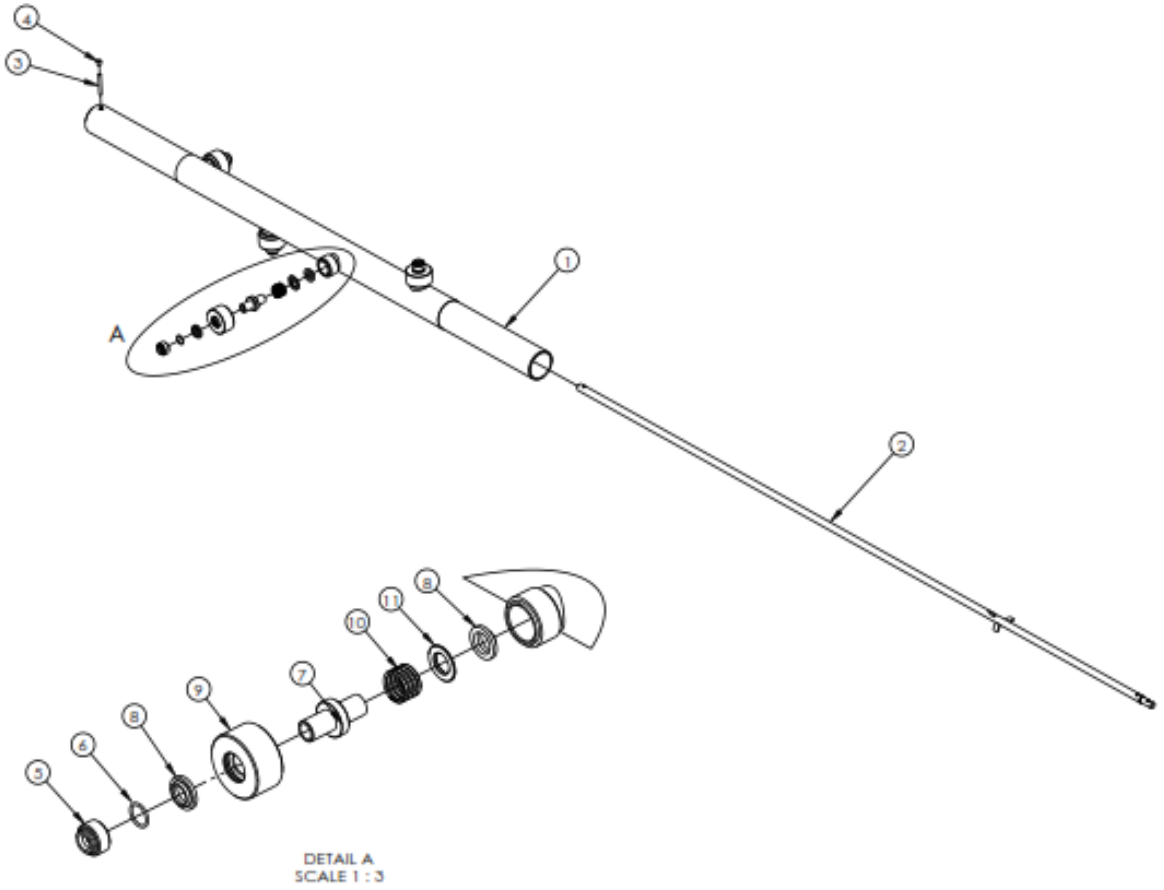

DISMANTLING AND ASSEMBLING THE FILTER COMPONENTS OF THE SAF-6000

Prior to opening the filter perform a self-cleaning cycle by pressing the "TEST" push button.

The fine screen

Dismantling:

1. Close the filter inlet and outlet valves and release the pressure.
2. Press the "TEST" push button and disconnect the power when the scanner is in the middle of its track (when the limit switch disc is half-way between the two limit switches).
3. Release the lid bolts (17) from their nuts.
4. Locate the centering sleeves, remove them from their holes and remove the lid (16).
5. Remove the seal (10) from the screen (9) and pull it out of the filter housing.
6. Remove the second seal from the screen.

Assembly:

1. Put the screen seal (10) on one end of the screen (9).
2. Insert the screen (9) into the filter housing (1). Make sure the screen is correctly positioned, all the way in.
3. Put the second seal (10) on the other end of the screen.
4. Assemble the lid on the filter housing. Make sure the screen and seal are correctly positioned in the lid seating.
5. Insert the centering sleeves into two opposite holes in the lid flange.
6. Insert bolts (17) with the discs on the lid side.
7. Place the discs and the nuts on bolts (17) on the housing side. Do not tighten them yet.
8. Tighten the bolts (17) in a controlled and balanced method.
9. Open the filter inlet and outlet valves and operate the control board.
10. Check proper operation of the filter.

The suction scanner:

Dismantling:

1. Begin the dismantling procedure as described above.
2. Partially release the tightening nut (5 on page 24).
3. Pull out the drive shaft connecting pin (12) by first removing the split pin (13).
4. Pull the suction scanner (11) in a spiral movement out of the filter housing.

Assembly:

1. Insert the suction scanner (11) into the screen (9). Make sure that the scanner shaft (2 on page 25) passes through the tightening nut (5 – parts schedule 2).
2. Insert the suction shaft (2 – parts schedule 3) into the drive shaft (3 – parts schedule 2). Make sure the holes in the above shafts are parallel.
3. Insert the connecting pin (12) to the parallel hole of the suction shaft (2 – parts schedule 3) and the drive shaft (3 – parts schedule 2) and lock it with the split pin (13).
4. Put the screen seal (10) on the end of the screen.
5. Continue to assemble the parts as described above.

The drive shaft housing and coarse screen:

Dismantling:

1. Close the inlet and outlet valves of the filter and release pressure.
2. Disconnect power supply from the control board.
3. Remove the cover (36) from the drive shaft housing (5) by unscrewing the wing nuts. Pull out the plug from the solenoid coil, remove the limit switch sling (2 – parts schedule 2) from the drive shaft housing by unscrewing the bolts (21 – parts schedule 2).
4. Carefully put the limit switch sling near the filter to avoid any damage to the electrical wires.
5. Disconnect the pilot tube (71) from the solenoid valve (70) and connector (42).
6. Disconnect the drainpipe from the exhaust valve.
7. Remove the drive unit (39) from the drive shaft housing (5) by unscrewing the nuts (33) from the bolts (30). By doing so, the drive shaft key (29) will be pulled out.

8. Pull out the connecting pin (12) by first removing the split pin (13).
9. Turn the drive shaft (3 on page 24) using a suitable spanner in order to release it from the scanner shaft (2 on page 25).
10. Partially release the tightening nut (5 on page 24).
11. Dismantle the drive shaft housing (5) from the filter housing (1) by unscrewing the bolts (6).
12. Pull out the flushing chamber (3) and the coarse screen (2).

Assembly:
1. Insert the coarse screen (2) into its place in the filter housing.
2. Apply some grease on the O-ring (5 – parts schedule 4) and insert the flushing chamber into its place. Make sure the scanner pipe enters into its bearing.
3. Install the drive shaft housing (5) into the filter housing (1) with the bolts (6) and tighten them.
4. Connect the drive shaft (3 – parts schedule 2) to the scanner shaft by using the connecting pin (12) and split pin (13).
5. Make sure that the drive shaft key (29) is fitted properly in the gearbox. Thread the drive shaft through the drive unit and note that the drive shaft groove is adjusted in accordance with the drive shaft key.
6. Connect the drive unit (39) to the drive shaft housing (5) with the bolts (30) and tighten them.
7. Connect the pilot tube between the solenoid valve (70) and the connector (42).
8. Assemble the limit switch sling in its place and push in the plug of the solenoid coil.
9. Connect the drainpipe to the exhaust valve (67).
10. Operate the control board and make sure the filter is operating properly.
11. Open the inlet and outlet valves and recheck filter operation.

PARTS SCHEDULE OF SAF-6000 WITH SPRING LOADED NOZZLES (SLN) - Section 1

No.	CAT. No.	Description	Qty	Material
1	710105-001223	Housing 6" SAF-6000 JAD EPOXY555 ICEA-3002	1	Various
2	700101-000982	Coarse Screen (SAF-6000)	1	S/ST-316
3	700190-002424	Flushing Chamber Assembly SAF-6000	1	Various
4	770102-000174	O-Ring P2-448 SAF-6000 Drive Unit Adaptor NBR	1	NBR
5	700190-002415	Drive Shaft Housing Assembly SAF-6000	1	Various
6	760101-000329	Hex Bolt Partial Thread M16X65 Zinc Plated C/ST	8	C/ST Zinc Plated
7	760103-000069	Flat Washer M16 DIN125 Zinc Plated C/ST	16	C/ST Zinc Plated
8	760102-000067	Hex Nut M16 Zinc Plated C/ST	8	C/ST Zinc Plated
9	700101-000970	Weavewire S/ST316 6000SQ.CM 550MIC for SAF6000	1	S/ST-316
10	770104-000075	Shaped Seal Hydraulic AM-03 (SAF Screen) NBR	2	NBR
11	700190-002471	SLN Scanner Assembly Improved SAF-6000	1	Various
12	710103-002230	Connecting Pin SAF-6000	1	ST.37-2
13	760105-000038	Split Pin 2X20 DIN 94 S/ST304	1	S/ST304
14	770102-000182	O-Ring Seal P2-459 (SAF-6000 Lid) NBR	1	NBR
15	710103-002274	Centering Sleeve Housing Lid SAF	2	S/ST316L
16	710105-001239	Lid SAF-6000 EPOXY555 IAEA-3002	1	Various
17	760101-000355	Hex Bolt Partial Thread M20X80 Zinc Plated C/ST	12	C/ST Zinc Plated
18	760103-000070	Flat Washer M20 DIN125 Zinc Plated C/ST	24	C/ST Zinc Plated
19	760102-000068	Hex Nut M20 Zinc Plated C/ST	12	C/ST Zinc Plated
20	710103-002238	Upper Bearing Insert SAF	1	Delrin
21	710103-002241	Leading Shaft SAF-6000	1	S/ST316L
22	770102-000095	O-Ring Seal P2-128 Sealing Insert NBR"S"	1	NBR
23	710103-002234	Tightening Plug (Leading Shaft) SAF-6000	1	Brass
24	770102-000172	O-Ring Seal P2-443 (6" Service Lid) NBR	1	NBR
25	740103-000141	Smooth Blind Flange 6" BSTD ICEA-3002	1	Various
26	760101-000328	Hex Bolt Partial Thread M16X60 Zinc Plated C/ST	8	C/ST Zinc Plated
27	760103-000069	Flat Washer M16 DIN125 Zinc Plated C/ST	16	C/ST Zinc Plated
28	760102-000067	Hex Nut M16 Zinc Plated C/ST	8	C/ST Zinc Plated
29	710103-002237	Drive Shaft Key SAF	1	Brass
30	760101-000308	Hex Bolt Full Thread M8X40 Zinc Plated C/ST	4	C/ST Zinc Plated
31	760103-000075	Flat Washer M8 DIN125 Zinc Plated C/ST	8	C/ST Zinc Plated
32	760103-000085	Spring Washer M8 DIN127 Zinc Plated C/ST	4	C/ST Zinc Plated
33	760102-000063	Hex Nut M8 Zinc Plated C/ST	4	C/ST Zinc Plated
34	760101-000522	Socket Head Cap Screw M8X20 S/ST304	4	S/ST304
35	700190-002427	Drive Shaft Cover (PVC) SAF	1	PVC
36	710105-001229	Drive Shaft Housing Cover SAF-6000 Red	1	Various
37	760105-000036	Rivet Blind 3X6 DIN 7337 S/ST316	4	S/ST316
38	900103-000020	Nameplate Aluminium for EBS+SAF CE EN	1	Aluminium
39	720201-000013	Drive Unit SAF-6000 440VAC 3PH 0.25KW 1/49 71 B5	1	Various
40	720501-000220	Bushing 1/4"MX1/4"F 120B Nickel Plated	1	Nickel Plated
41	730104-000202	Valve 3-Way 1/4" (SAGIV SY3 1Y3NO4OA4)	1	Various
42	720501-000204	L-Connector 5/16"X1/8" 69F Nickel Plated	3	Nickel Plated
43	720501-000218	L-Connector 1/4"FX1/4"M Nickel Plated	1	Nickel Plated
44	720301-000043	Pressure Gauge 16 BAR 1/4" Back Inlet	1	Various
45	720501-000202	L-Connector 5/16"X1/4" 69F Brass	5	Brass

No.	CAT. No.	Description	Qty	Material
46	700190-002336	Manometer Valve 1/4" With Drain	1	Various
47	790208-000009	Pipe 5.6mmX4mm PVC Black	0.1M	PVC
48	710103-002074	Instrumentation Combined Bracket SAF	1	S/ST304
49	700190-002421	Electrical Junction Box (SAF)	1	Various
50	760101-000531	Phillips Pan Machine Screw M5X16 S/ST304	4	S/ST304
51	760103-000093	Flat Washer M5 DIN125 S/ST304	4	S/ST304
52	760102-000084	Hex Nut M5 S/ST304 DIN934	4	S/ST304
53	700190-002618	Pressostat MIDWEST Without Fittings	1	Various
54	720501-000213	Connector 5/16"X1/8" 68F Brass	2	Brass
55	760101-000444	Hex Bolt Full Thread M6X20 S/ST304 DIN933	2	S/ST304
56	760103-000094	Flat Washer M6 DIN125 S/ST316	4	S/ST316
57	760103-000109	Spring Washer M6 DIN127 S/ST316	2	S/ST316
58	760102-000085	Hex Nut M6 S/ST316 DIN934	2	S/ST316
59	780101-000789	L-Connector 3/4" F/M Galvanized	1	Galvanized
60	730104-000220	Ball Valve 3/4" M/F (Brass/Nickel)	1	Brass/Nickel
61	700190-001159	Housing 3/4" (AC, BLACK) BSPT	1	Nylon
62	700101-000277	Molded Nylon 110 SQ.CM S200 MIC F/3/4"AC	1	Nylon
63	710101-000449	3/4" Bowl- Closed (AC,BLACK)	1	Nylon
64	710103-002569	Raccord Nipple 1/4" for 3/4" Filter	1	Nylon
65	770102-000082	O-Ring Seal P2-112 NBR "S"	1	NBR
66	710103-002570	Raccord Nut 3/4" for 3/4" Filter	1	Nylon
67	730103-000466	2" Bermad Hydraulic Valve (RAM) BSP RED	1	Various
68	720501-000206	Connector 5/16"X1/4" 68F Brass	1	Brass
69	710103-000591	Press Check Point Connector 1/4"X1/4" Brass	1	Brass
70	720103-000177	Sloenoid Valve 24VAC,50HZ,NO	1	Various
71	720502-000036	Control Tube 5/16" Nylon Air Brake	2M	Nylon

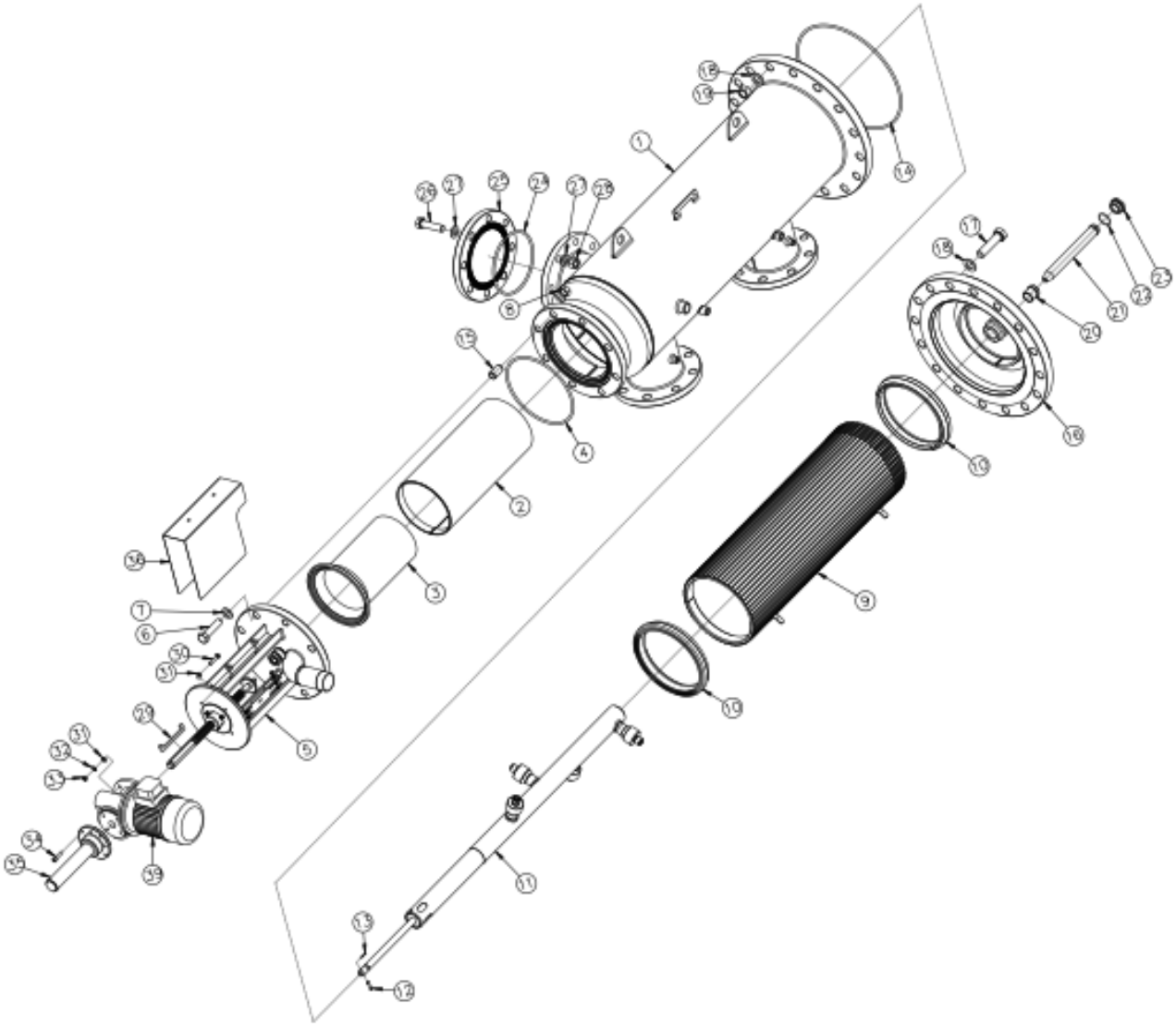

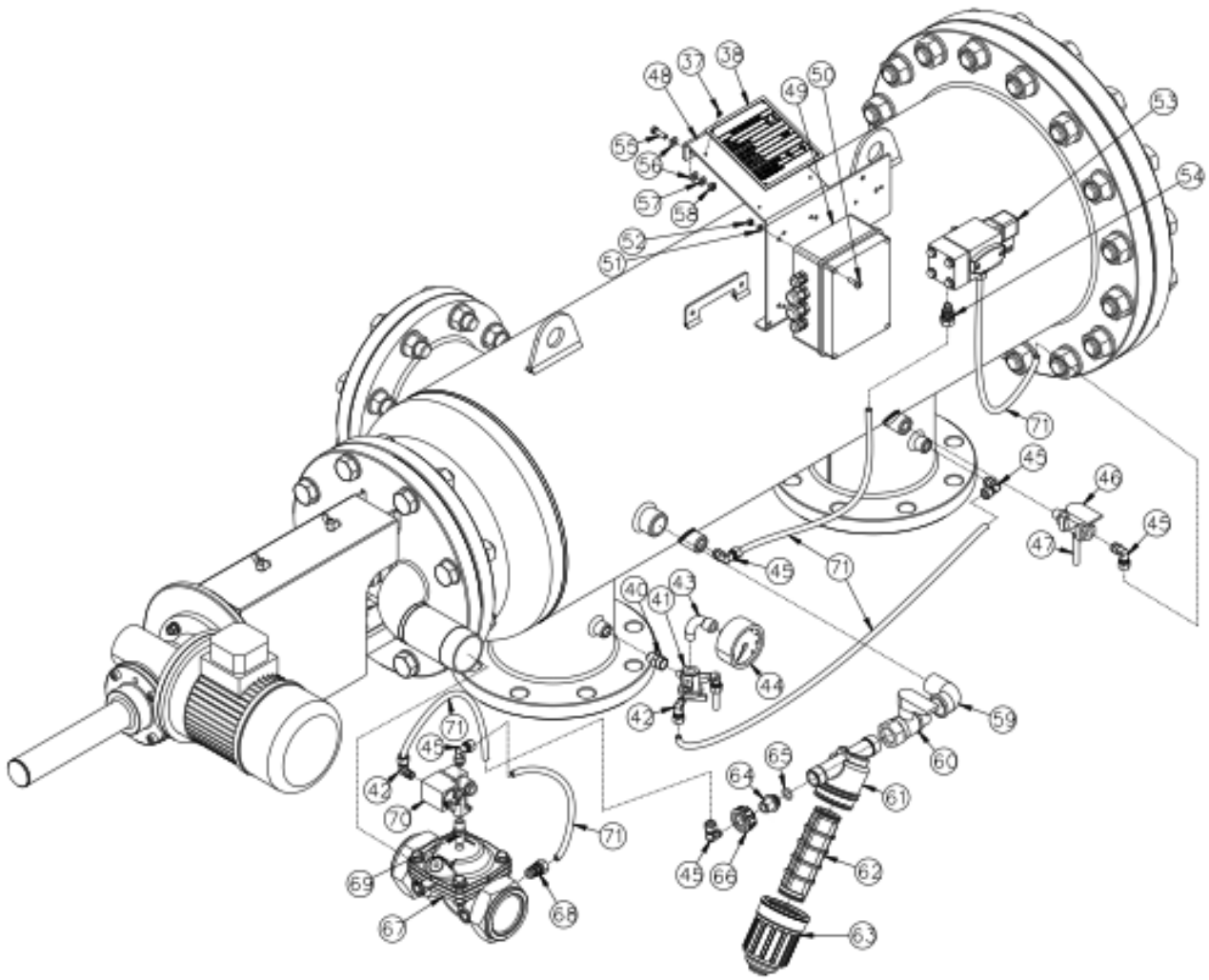
48
37
38
49
50
53
55
56
57
58
52
51
54
71
45
46
47
45
45
71
40
41
43
44
42
59
60
61
62
63
64
65
66
45
71
45
42
70
71
69
67
68

PARTS SCHEDULE OF SAF-6000 WITH SLN - Section 2

No.	CAT. No.	Description	Qty	Material
1	710105-001270	Drive Shaft Housing SAF-6000 Red	1	ST.37-2
2	710103-002309	HD Limit Switch Sling (SAF)	1	S/ST 316L
3	710103-002257	Drive Shaft (SAF-6000)	1	S/ST 316L
4	710103-002233	Drive Bushing (SAF)	1	Brass
5	710103-002258	Tightening Nut (SAF-6000)	1	Brass
6	770104-000107	Sealing Rope 5MM (L1779)	3	Teflon
7	710103-002308	Limit Switch Plate (SAF) HD	1	S/ST 316L
8	760101-000450	Hex Bolt Full Thrd M6x60 S/St304 DIN933	2	S/ST 304
9	760101-000447	Hex Bolt Full Thread M6x35 DIN933 S/St.316	3	S/ST 304
10	760103-000094	Flat Washer M6 DIN125 S/ST316	16	S/ST 316
11	760103-000109	Spring Washer M6 DIN127 S/ST316	2	S/ST 316
12	760102-000085	Hex Nut M6 S/ST316 DIN934	4	S/ST 316
13	760102-000101	Nylon Insert Lock Nut M6 S/ST304 DIN985	3	S/ST 304
14	760106-000022	Limit Switch Plate Locking Ring	1	S/ST 304
15	720302-000004	Limit Switch NC (EBS,SAF) FA 4131-2DN	2	Various
16	760101-000511	Phillips Pan Machine Screw M4x20 DIN7985	4	S/ST 304
17	760102-000099	Nylon Insert Lock Nut M4 S/ST304 DIN985	4	S/ST 304
18	760103-000092	Flat Washer M4 DIN125 S/ST304	4	S/ST 304
19	760102-000107	Wing Nut M6 304 DIN315	2	S/ST 304
20	770101-000028	O-Ring Seal 20x3 (Tightening Nut SAF)Nbr"S"	1	NBR
21	760101-000444	Hex Bolt Full Thread M6x20 S/St304 DIN933	2	S/ST 304

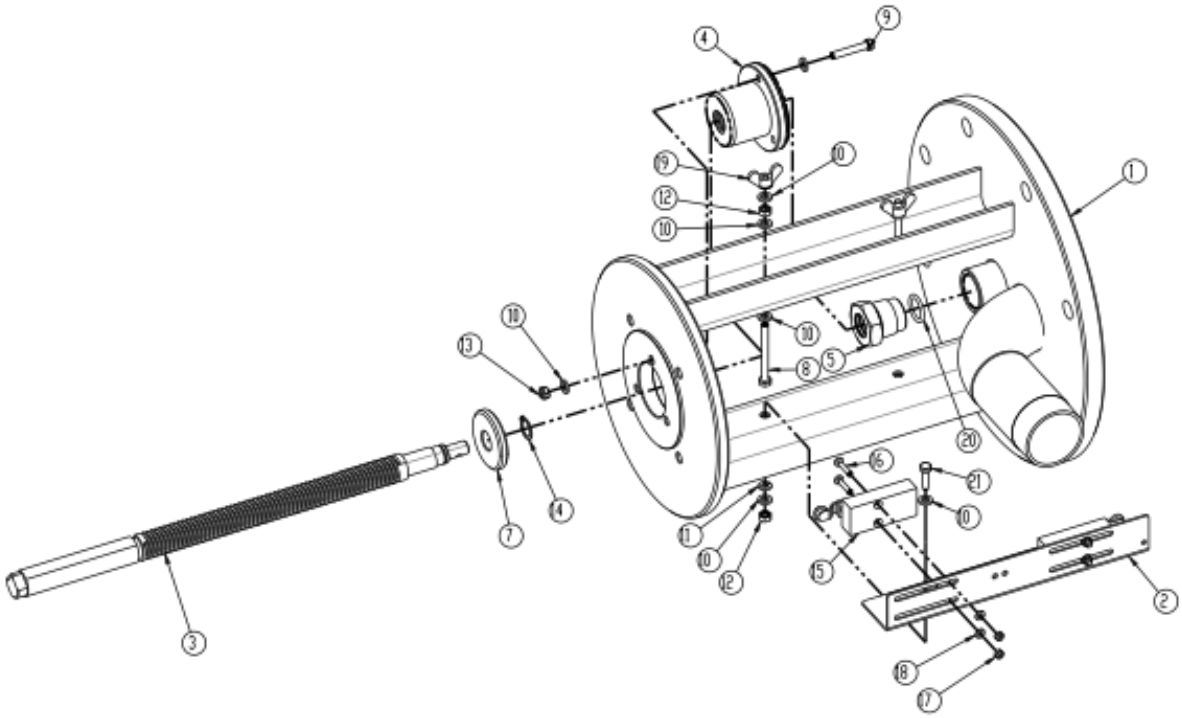

PARTS SCHEDULE OF SAF-6000 WITH SLN - Section 3

No.	CAT. No.	Description	Qty	Material
1	710103-002348	SLN Scanner Assembly SAF-6000 Machined	1	S/ST 316
2	710103-002259	Suction Scanner Shaft	1	S/ST 316L
3	710103-002520	Connecting Pin (Shaft To Scanner)	1	S/ST 316
4	710103-002501	Plug Threaded M8 for SAF-6000 PRO	1	Delrin
5	710103-002229	Lower Bearing Insert	1	Delrin
6	710103-002316	Spring Loaded Nozzle Cap SAF-6000	4	Polyurethane
7	710103-002318	Scanner Nozzle Body SLN Sc.SAF-6000	4	S/ST 316L
8	710103-002317	Tightening Nut for SLN Scanner SAF-6000	4	Delrin
9	710103-002315	Spring Seat Spring Loaded Nozzle SAF-6000	4	Delrin
10	770102-000064	O-Ring Seal 2-016 NBR	4	NBR
11	770104-000093	Spring Loaded Nozzle Seal - SAF (Blue)	8	ECOPUR
12	760107-000047	Spring For Loaded Nozzles Scanner SAF 6000	4	S/ST 302

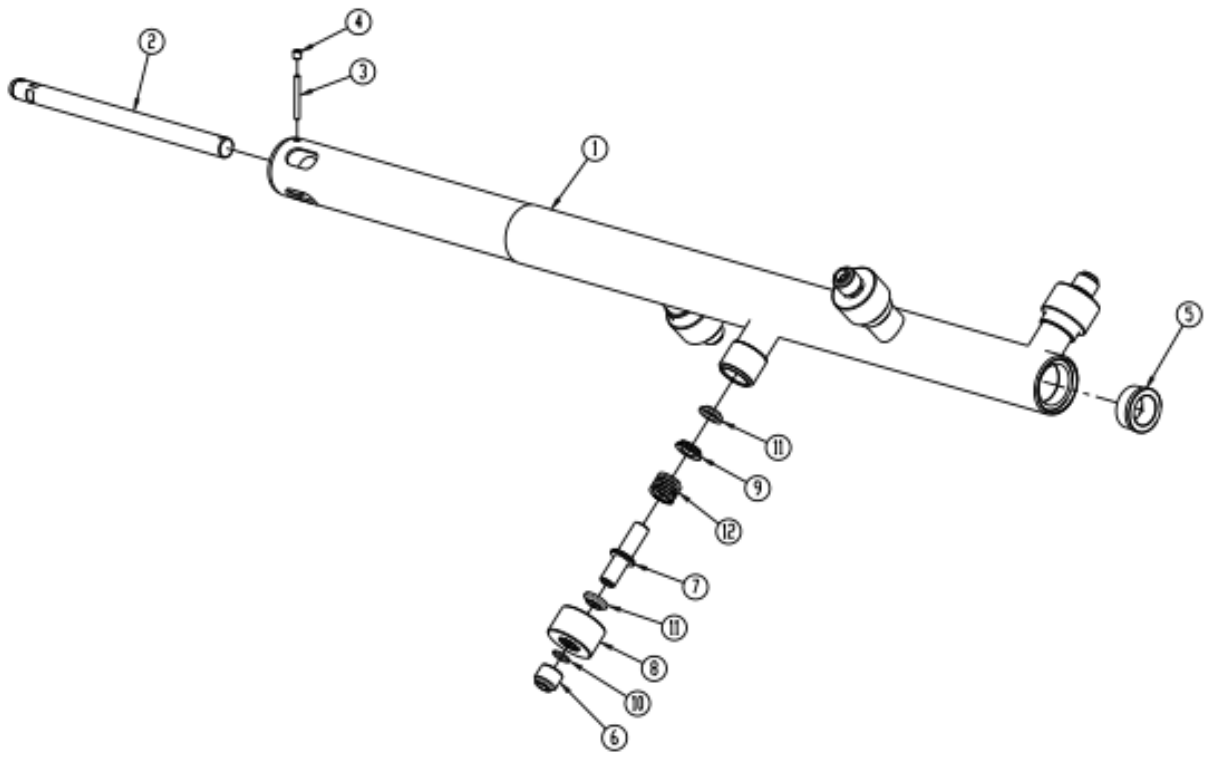

PARTS SCHEDULE OF SAF-6000 WITH SLN - Section 4

No.	CAT. No.	Description	Qty	Material
1	710105-001235	SAF-6000 Flushing Chamber Epoxy555 IAEA3002	1	Various
2	710103-002325	Sealing Flange Flushing Chamber (SAF-97)	1	Delrin
3	760101-000459	Hex Bolt Full Thrd M10x30 S/St316 DIN933	2	S/ST 316
4	760103-000097	Flat Washer M10 DIN125 S/ST316	2	S/ST 316
5	770101-000040	O-Ring 60X4 Flushing Chamber NBR	1	NBR

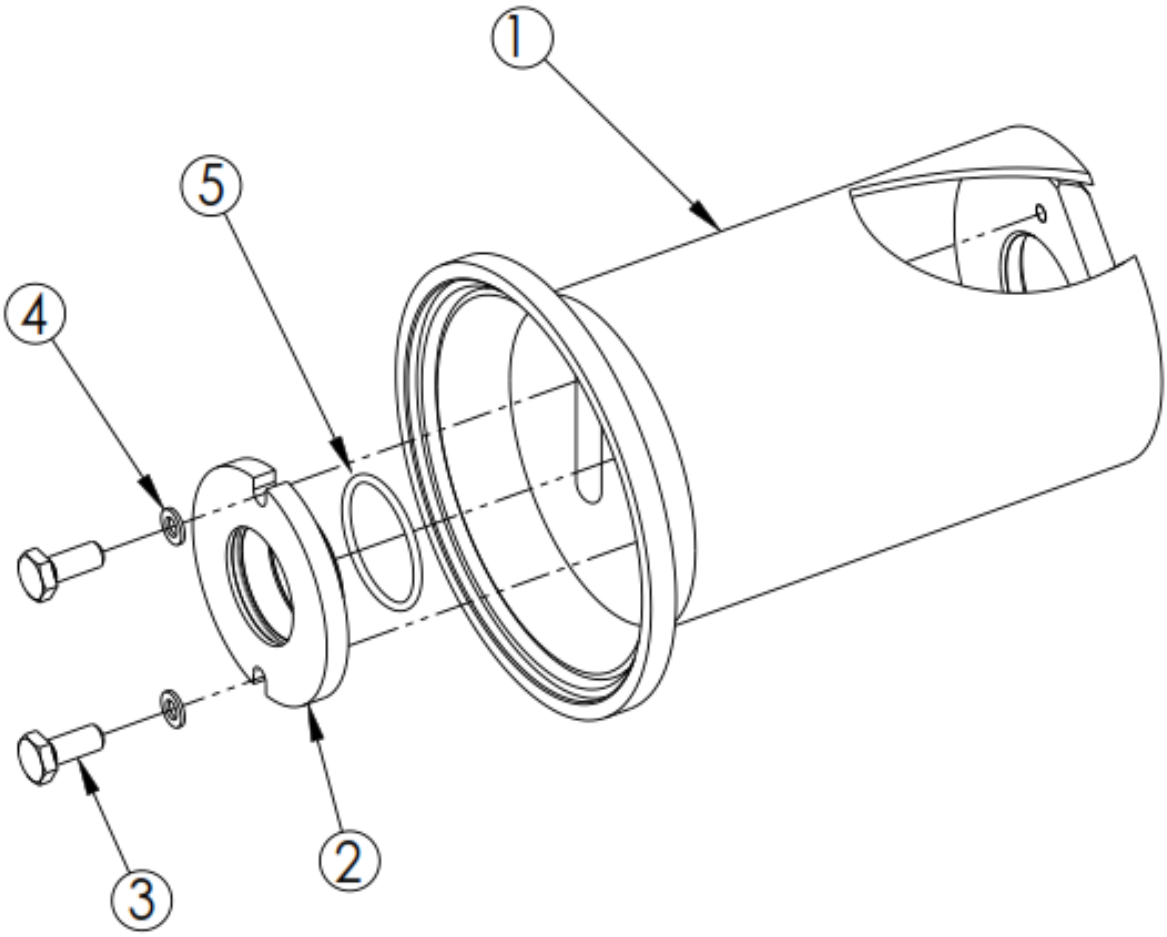

PARTS SCHEDULE – SKID SYSTEM AND PARTS

SAF-3000-318 System

Item	Disc 1	Disc 2 SAP	Part #	Qty
1	Control Panel	CB 1F 460V/3~SOL BAS AMD 0.2-1A, 3.2-16A	720102-002168	1
2	Base	SAF 4" 3000 BASE, CS, EPX CT	710102-002885	1
3	Panel Support	SCREEN FILTER L1+ U-STRUT	710102-002906	1
4	Pump/Motor	10 HP SCOT #25, HE WEG 215JM SF, BN	720401-000593	1
5	Filter	4" SAF-3000 ASA150 C/ST POLY RED SLN 50M	041010-000045	1
6	Butterfly Valves	BUTTERFLY VALVE - 4" BRAY SER. 31H	730105-000455	2
7	Drive Motor	.25HP,TEFC,208/230/460,3P,1725,IP55,D63D	720203-000128	1

SAF-4500-392 System

Item	Disc 1	Disc 2 SAP	Part #	Qty
1	Control Panel	CB 1F 460V/3~SOL BAS AMD 2.4A, 16-40A	720102-000661	1
2	Base	SAF 6" 4500 BASE, CS, EPX CT	710102-002886	1
3	Panel Support	SCREEN FILTER L1+ U-STRUT	710102-002906	1
4	Pump/Motor	15 HP SCOT #56F, HE WEG 215JM SF, BN	720401-000621	1
5	Filter	6"SAF4500 ASA150 C/ST POLY RED SLN 50M	041016-000023	1
6	Butterfly Valves	BUTTERFLY VALVE - 6" BRAY SER. 31H	730105-000461	2
7	Drive Motor	.25HP,TEFC,208/230/460,3P,1725,IP55,D63D	720203-000128	1

SAF-4500-475 System

Item	Disc 1	Disc 2 SAP	Part #	Qty
1	Control Panel	CB 1F 460V/3~SOL BAS AMD 2.4A, 16-40A	720102-000661	1
2	Base	SAF 6" 4500/6000 BASE, CS, EPX CT	710102-002887	1
3	Panel Support	SCREEN FILTER L1+ U-STRUT	710102-002906	1
4	Pump/Motor	20 HP SCOT #57, HE WEG 256JM SF, BN	720401-000622	1
5	Filter	6"SAF4500 ASA150 C/ST POLY RED SLN 50M	041016-000023	1
6	Butterfly Valves	BUTTERFLY VALVE - 6" BRAY SER. 31H	730105-000461	2
7	Drive Motor	.25HP,TEFC,208/230/460,3P,1725,IP55,D63D	720203-000128	1

SAF-6000-565 System

Item	Disc 1	Disc 2 SAP	Part #	Qty
1	Control Panel	CB 1F 460V/3~SOL BAS AMD 2.4A, 16-40A	720102-000661	1
2	Base	SAF 6" 4500/6000 BASE, CS, EPX CT	710102-002887	1
3	Panel Support	SCREEN FILTER L1+ U-STRUT	710102-002906	1
4	Pump/Motor	20 HP SCOT #57, HE WEG 256JM SF, BN	720401-000576	1
5	Filter	6" SAF6K SLN OL ASA150 C/ST EPXY RED 50M	041021-000035	1
6	Butterfly Valves	BUTTERFLY VALVE - 6" BRAY SER. 31H	730105-000461	2
7	Drive Motor	MOTOR SAF 6000-220/440 3 PHASE UL 1/3HP	720203-000112	1

SAF-6000-663 System

Item	Disc 1	Disc 2 SAP	Part #	Qty
1	Control Panel	CB 1F 460V/3~SOL BAS AMD 2.4A, 16-40A	720102-000661	1
2	Base	SAF 6" 4500/6000 BASE, CS, EPX CT	710102-002887	1
3	Panel Support	SCREEN FILTER L1+ U-STRUT	710102-002906	1
4	Pump/Motor	20 HP SCOT #57, HE WEG 256JM SF, BN	720401-000623	1
5	Filter	6" SAF6K SLN OL ASA150 C/ST EPXY RED 50M	041021-000035	1
6	Butterfly Valves	BUTTERFLY VALVE - 6" BRAY SER. 31H	730105-000461	2
7	Drive Motor	MOTOR SAF 6000-220/440 3 PHASE UL 1/3HP	720203-000112	1

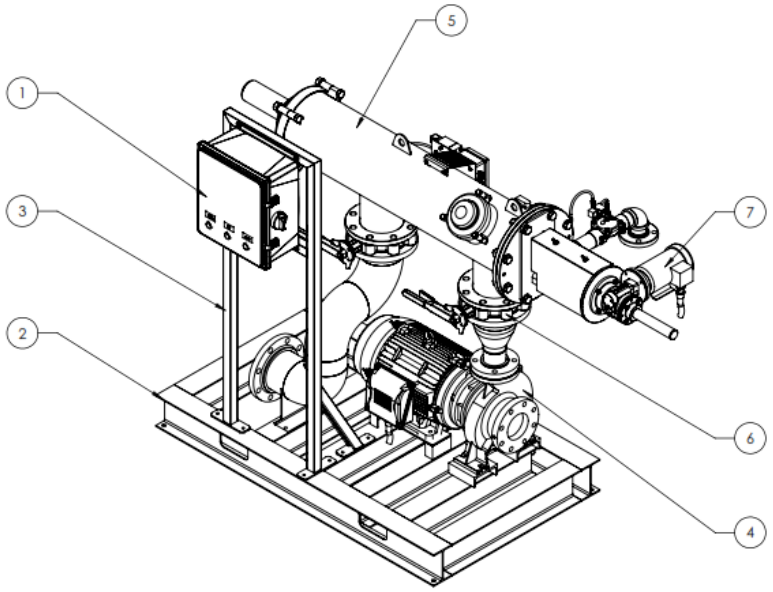

PUMP CURVES

Pump Data Sheet - Scot Division of Ardox Corp.

Company: Amiad Filtration System
Name: SAF-3000-318
Date: 11/20/2015

SCOT PUMP

Pump:

Size: 25-5.6-3.0x3.0

Type: Endsuct-Open
Synch speed: 3600 rpm

Speed: 3500 rpm
Dia: 5.25 in

Curve: 40.000.444

Impeller:

Specific Speeds:

Ns: ---
Nss: ---

Dimensions:

Suction: 3 in
Discharge: 3 in

Search Criteria:

Flow: 318 US gpm

Head: 70 ft

Near miss: 5 % of Head

Fluid:

Water
SG: 1
Viscosity: 1.105 cP

Temperature: 60 °F
Vapor pressure: 0.2563 psi a
Atm pressure: 14.7 psi a

NPSHa: 10 ft

Pump Limits:

Temperature: 300 °F
Pressure: 175 psi g
Sphere size: ---

Power: ---
Eye area: ---

Motor:

Standard: NEMA
Enclosure: TEFC

Size: 10 hp
Speed: 3600
Frame: 215T

Sizing criteria: Max Power on Design Curve

---- Data Point ----

Flow:	318 US gpm
Head:	74.6 ft
Eff:	70%
Power:	8.55 hp
NPSHr:	8.39 ft

---- Design Curve ----

Shutoff head:	117 ft
Shutoff dP:	50.6 psi
Min flow:	---

BEP: 71% @ 270 US gpm

NOL power:
8.79 hp @ 370 US gpm

-- Max Curve --

Max power:
11.1 hp @ 400 US gpm

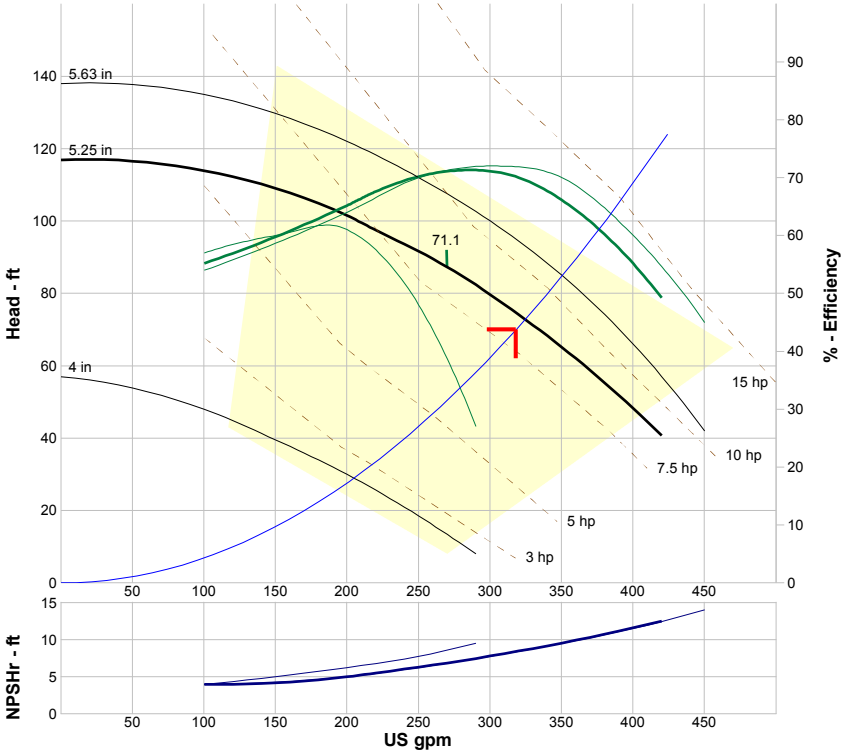

Performance Evaluation:

Flow US gpm	Speed rpm	Head ft	Efficiency %	Power hp	NPSHr ft
382	3500	54.4	59	8.79	10.8
318	3500	74.6	70	8.55	8.39
254	3500	90.6	70	8.26	6.42
191	3500	103	64	7.62	4.91
127	3500	111	58	5.93	4.27

Selected from catalog: Scot.60 Vers: 10.1

Pump Data Sheet - Scot Division of Ardox Corp.

Company: Amiad Filtration Systems
Name: SAF-4500-392
Date: 11/20/2015

SCOT PUMP

Pump:

Size: 056F-6.5-3.0x3.0

Type: Endsuct-Encl
Synch speed: 3600 rpm

Speed: 3500 rpm
Dia: 5.125 in

Curve: 40.000.211

Impeller:

Specific Speeds:

Ns: ---
Nss: ---

Dimensions:

Suction: 3 in
Discharge: 3 in

Search Criteria:

Flow: 392 US gpm

Head: 70 ft

Near miss: 5 % of Head

Fluid:

Water
SG: 1
Viscosity: 1.105 cP

Temperature: 60 °F
Vapor pressure: 0.2563 psi a
Atm pressure: 14.7 psi a

NPSHa: 10 ft

Pump Limits:

Temperature: 300 °F
Pressure: 175 psi g
Sphere size: ---

Power: ---
Eye area: ---

Motor:

Standard: NEMA
Enclosure: TEFC

Size: 15 hp
Speed: 3600
Frame: 254T

Sizing criteria: Max Power on Design Curve

Pump Selection Warnings:

Specified NPSH available is insufficient for the pump.

---- Data Point ----

Flow:	392 US gpm
Head:	73.2 ft
Eff:	66%
Power:	10.9 hp
NPSHr:	14 ft

---- Design Curve ----

Shutoff head:	96.5 ft
Shutoff dP:	41.8 psi
Min flow:	---

BEP: 67% @ 385 US gpm

NOL power:
10.9 hp @ 385 US gpm

-- Max Curve --

Max power:
30 hp @ 599 US gpm

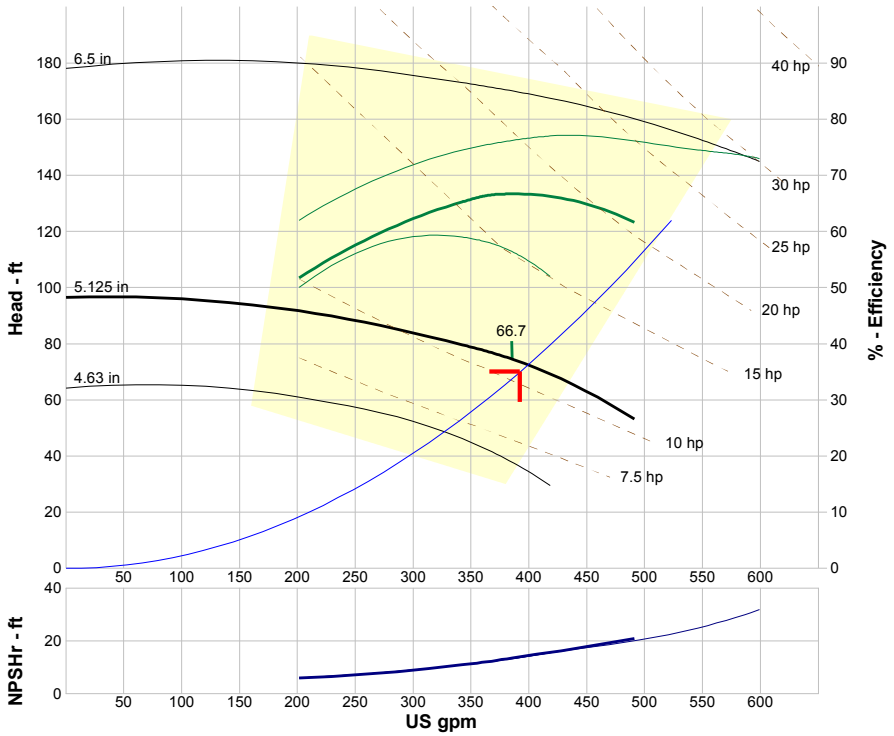

Performance Evaluation:

Flow US gpm	Speed rpm	Head ft	Efficiency %	Power hp	NPSHr ft
470	3500	57.4	63	10.7	19.5
392	3500	73.2	66	10.9	14
314	3500	82.1	63	10.2	10
235	3500	88.8	55	9.37	7.21
157	3500	---	---	---	---

Selected from catalog: Scot.60 Vers: 10.1

Pump Data Sheet - Scot Division of Ardox Corp.

Company: Amiad Filtration System
Name: SAF-4500-475
Date: 11/20/2015

SCOT PUMP

Pump:

Size: 057-6.9-4.0x3.0

Type: Endsuct-Encl
Synch speed: 3600 rpm

Speed: 3500 rpm
Dia: 5.25 in

Curve: 40.000.351

Impeller:

Specific Speeds:

Ns: ---
Nss: ---

Dimensions:

Suction: 4 in
Discharge: 3 in

Search Criteria:

Flow: 475 US gpm

Head: 70 ft

Near miss: 5 % of Head

Fluid:

Water
SG: 1
Viscosity: 1.105 cP

Temperature: 60 °F
Vapor pressure: 0.2563 psi a
Atm pressure: 14.7 psi a

NPSHa: 10 ft

Pump Limits:

Temperature: 300 °F
Pressure: 175 psi g
Sphere size: ---

Power: ---
Eye area: ---

Motor:

Standard: NEMA
Enclosure: TEFC

Size: 20 hp
Speed: 3600
Frame: 256T

Sizing criteria: Max Power on Design Curve

Pump Selection Warnings:

Specified NPSH available is insufficient for the pump.

---- Data Point ----	
Flow:	475 US gpm
Head:	82.3 ft
Eff:	62%
Power:	15.8 hp
NPSHr:	14.2 ft

---- Design Curve ----	
Shutoff head:	102 ft
Shutoff dP:	44.2 psi
Min flow:	---
BEP:	63% @ 525 US gpm
NOL power:	16.4 hp @ 600 US gpm

-- Max Curve --	
Max power:	40 hp @ 1000 US gpm

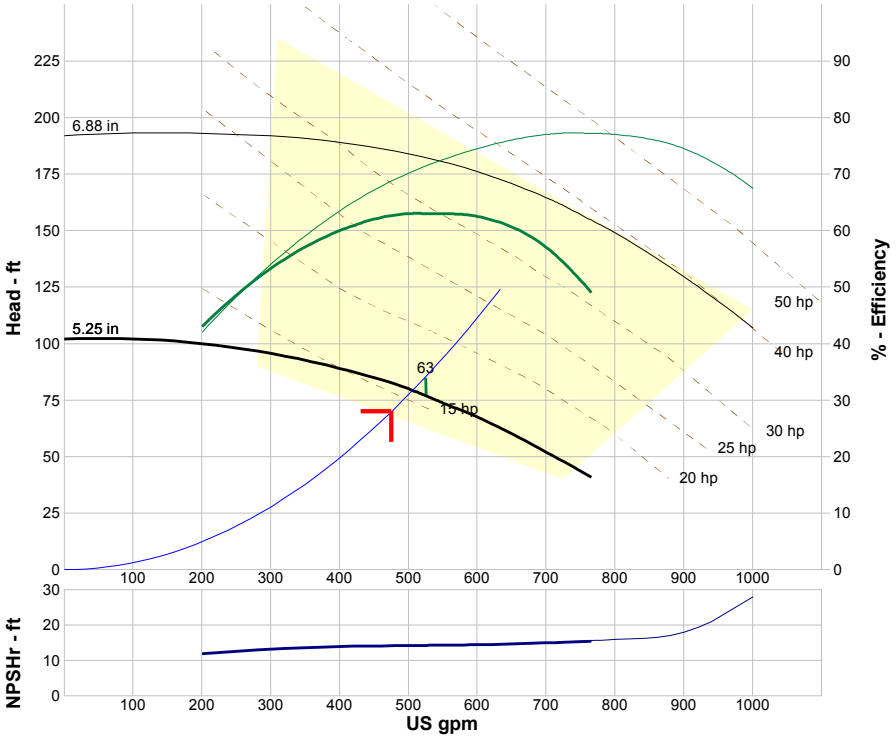

Performance Evaluation:

Flow US gpm	Speed rpm	Head ft	Efficiency %	Power hp	NPSHr ft
570	3500	71.3	63	16.3	14.4
475	3500	82.3	62	15.8	14.2
380	3500	90.1	58	14.7	13.8
285	3500	95.3	50	13.1	12.9
190	3500	---	---	---	---

Selected from catalog: Scot.60 Vers: 10.1

Pump Data Sheet - Scot Division of Ardox Corp.

SCOT PUMP

Company: Amiad Filtration Systems
Name: SAF-6000-565
Date: 11/20/2015

Pump:

Size: 057-6.9-4.0x3.0

Type: Endsuct-Encl
Synch speed: 3600 rpm

Speed: 3500 rpm
Dia: 5.25 in

Curve: 40.000.351

Impeller:

Specific Speeds:

Ns: ---
Nss: ---

Dimensions:

Suction: 4 in
Discharge: 3 in

Search Criteria:

Flow: 565 US gpm

Head: 70 ft

Near miss: 5 % of Head

Fluid:

Water
SG: 1
Viscosity: 1.105 cP

Temperature: 60 °F
Vapor pressure: 0.2563 psi a
Atm pressure: 14.7 psi a

NPSHa: 10 ft

Pump Limits:

Temperature: 300 °F
Pressure: 175 psi g
Sphere size: ---

Power: ---
Eye area: ---

Motor:

Standard: NEMA
Enclosure: TEFC

Size: 20 hp
Speed: 3600
Frame: 256T

Sizing criteria: Max Power on Design Curve

Pump Selection Warnings:

Specified NPSH available is insufficient for the pump.

---- Data Point ----	
Flow:	565 US gpm
Head:	71.9 ft
Eff:	63%
Power:	16.3 hp
NPSHr:	14.4 ft

---- Design Curve ----	
Shutoff head:	102 ft
Shutoff dP:	44.2 psi
Min flow:	---
BEP:	63% @ 525 US gpm
NOL power:	16.4 hp @ 600 US gpm

-- Max Curve --
Max power: 40 hp @ 1000 US gpm

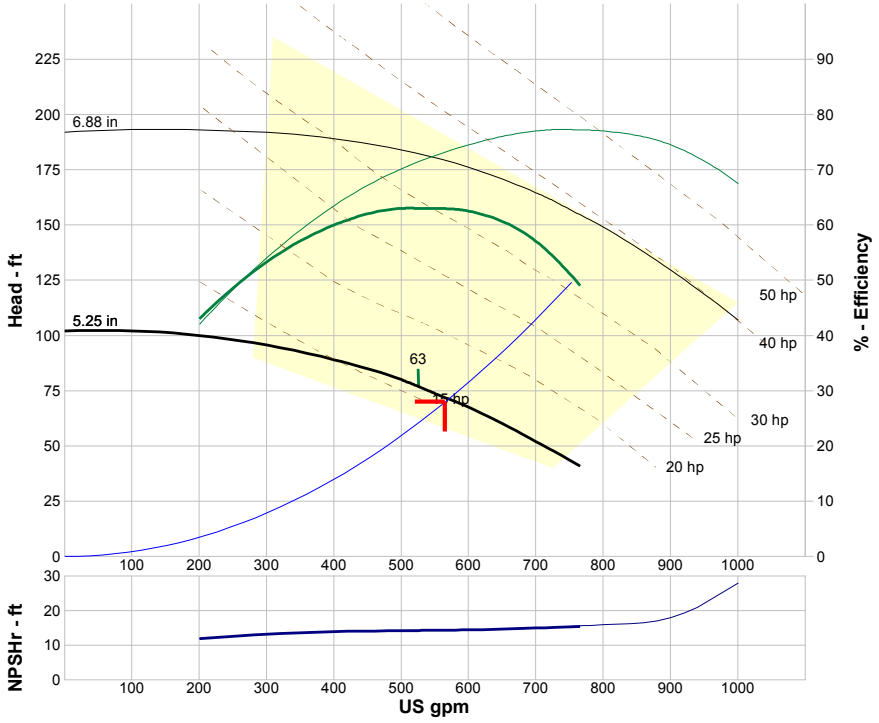

Performance Evaluation:

Flow US gpm	Speed rpm	Head ft	Efficiency %	Power hp	NPSHr ft
678	3500	55.4	58	16.2	14.9
565	3500	71.9	63	16.3	14.4
452	3500	84.3	62	15.5	14.1
339	3500	92.4	55	14	13.4
226	3500	98.6	45	12.2	12.3

Selected from catalog: Scot.60 Vers: 10.1

Pump Data Sheet - Scot Division of Ardox Corp.

Company: Amiad Filtration Systems
Name: SAF-6000-663
Date: 11/20/2015

SCOT PUMP

Pump:

Size: 057-6.9-4.0x3.0

Type: Endsuct-Encl
Synch speed: 3600 rpm

Speed: 3500 rpm
Dia: 5.5 in

Curve: 40.000.351

Impeller:

Specific Speeds:

Ns: ---
Nss: ---

Dimensions:

Suction: 4 in
Discharge: 3 in

Search Criteria:

Flow: 663 US gpm

Head: 70 ft

Near miss: 5 % of Head

Fluid:

Water
SG: 1
Viscosity: 1.105 cP

Temperature: 60 °F
Vapor pressure: 0.2563 psi a
Atm pressure: 14.7 psi a

NPSHa: 10 ft

Pump Limits:

Temperature: 300 °F
Pressure: 175 psi g
Sphere size: ---

Power: ---
Eye area: ---

Motor:

Standard: NEMA
Enclosure: TEFC

Size: 20 hp
Speed: 3600
Frame: 256T

Sizing criteria: Max Power on Design Curve

Pump Selection Warnings:

Specified NPSH available is insufficient for the pump.

---- Data Point ----	
Flow:	663 US gpm
Head:	78.1 ft
Eff:	69%
Power:	19 hp
NPSHr:	14.8 ft
---- Design Curve ----	
Shutoff head:	116 ft
Shutoff dP:	50.2 psi
Min flow:	---
BEP:	70% @ 574 US gpm
NOL power:	19.1 hp @ 821 US gpm
-- Max Curve --	
Max power:	40 hp @ 1000 US gpm

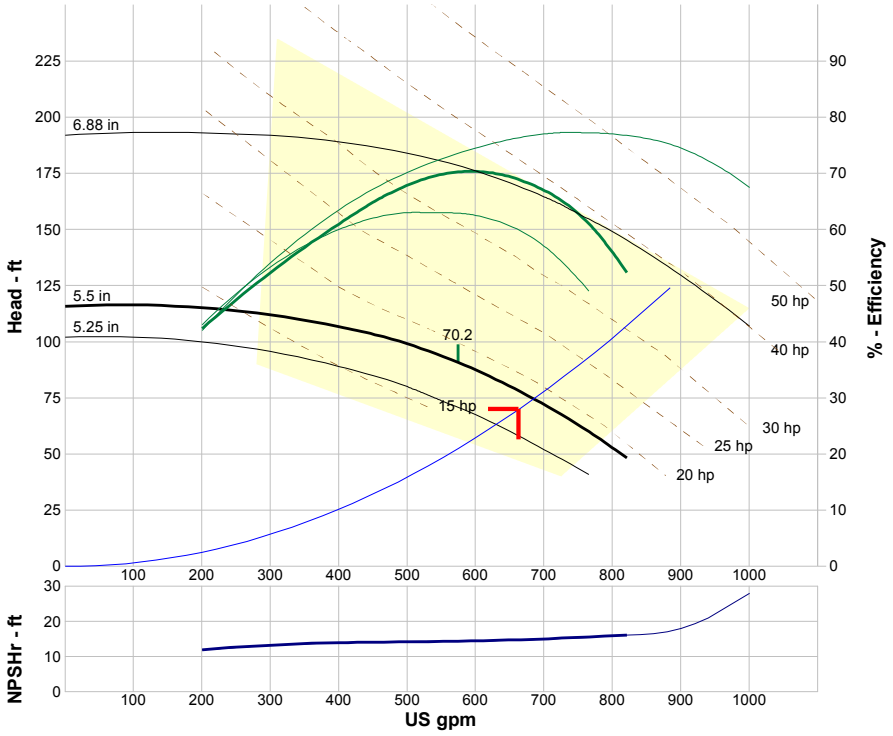

Performance Evaluation:

Flow US gpm	Speed rpm	Head ft	Efficiency %	Power hp	NPSHr ft
796	3500	53.5	56	19.1	15.9
663	3500	78.1	69	19	14.8
530	3500	95.4	68	18.5	14.3
398	3500	107	61	17.6	14
265	3500	112	48	15	12.7

Selected from catalog: Scot.60 Vers: 10.1

Level I+ Filter Controller

Installation, Operation and Maintenance Instructions

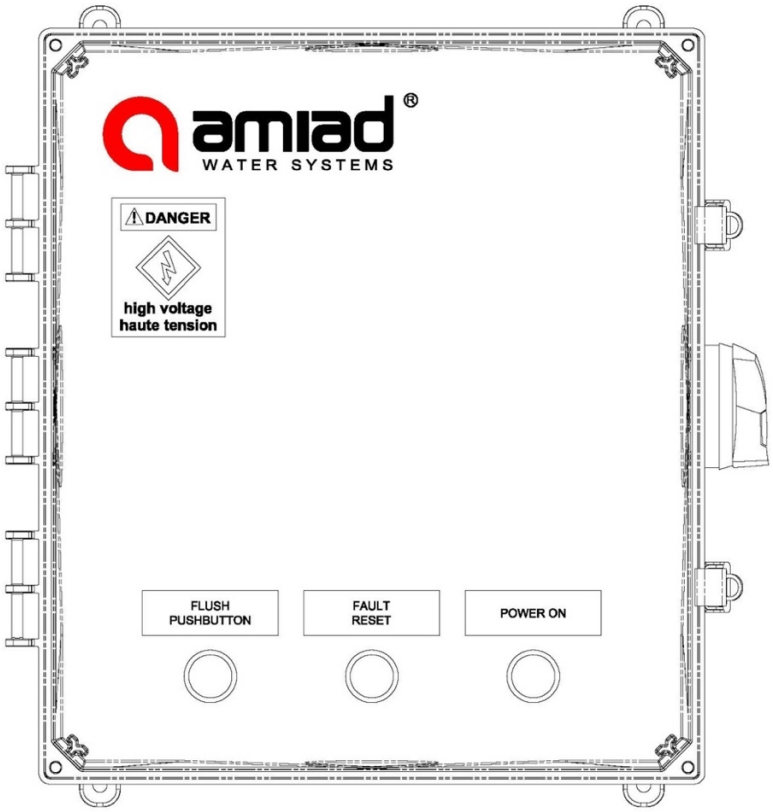

Table of Contents

1. Introduction

To Our Customers,

Thank you for your purchase from the Amiad filter product line. Amiad products are designed and built to ensure successful operation as a part of your system. If operated and maintained properly, you can expect many years of service from this equipment.

Amiad wants to be sure that this equipment meets all of your needs. We depend upon your feedback to make necessary upgrades and improvements. Please contact our office with any comments or questions.

We look forward to assisting you with this product and any future filter system needs.

Amiad Water Systems
120-J Talbert Road
Mooresville, NC 28117
Toll Free 800 24 FILTER
Telephone 704.662.3133
Fax 704.662.3155
infousa@amiad.com

2. Safety

2.1 Intended Use

The Amiad Controller is only intended to be used with the appropriate Amiad products. Appropriate inspection and maintenance should be conducted to ensure safe operation.

Using the equipment in potentially explosive atmospheres is not permitted unless the equipment is designed for such service.

Any

- retrofitting or attachment of third party equipment
- use of spare parts that are not supplied or recommended by Amiad
- repairs implemented by companies or persons that are not authorized by the manufacturer

will result in the warranty becoming null and void.

2.2 Personnel Selection and Qualification

Persons operating or maintaining the Amiad Controller should be

- At least 18 years of age
- Properly trained for operation of this equipment
- Familiar with the relevant technical rules and safety regulations

The End-user should ensure that only personnel with the required qualifications and training shall operate and maintain the Amiad equipment.

Work on electronic components should only be performed by qualified personnel.

The term qualified personnel includes persons able to implement the required activities in each case on the basis of their vocational training and experience, as well as their knowledge of relevant and applicable standards and regulations on the prevention of accidents. These persons will be authorized by the equipment owner and by the person responsible for safety and should be trained to correctly operate and maintain this specific equipment.

2.3 Informal Safety Measures

The operating and maintenance instructions should be kept at the installation site of the Amiad Controller at all times. Applicable local regulations on the prevention of accidents and on the protection of the environment should be posted at the facility.

2.4 Hazards of Electric Power and Cables

All live components and cables are protected against accidental contact. Before opening any housing covers, connectors and cables, these items should be de-energized using safe electrical practices outlined in NFPA 79, NFPA 70 and other local standards.

2.5 Safety Devices

Trained operating personnel must ensure the following:

- Disconnect handle is damage free and able to lock out when work is required.
- Latches are secured and door is closed when equipment is in operation.

Identified deficiencies regarding these safety devices must be remedied immediately. The Amiad Controller must be disabled if any safety devices are missing or malfunctioning.

3. Product Description

This Amiad controller enables users to have powerful filter controls in a compact design. It is available in a wide array of power classes and voltages to meet the needs of the market. The initiation of the Amiad filters' self cleaning systems is by a signal from a differential pressure switch measuring the pressure of the filter inlet and outlet, a timer, control panel pushbutton for manual start or a remote start input.

The system is designed specifically for each customer's needs. Refer to the drawings/schematics or electrical data plate on the side of the enclosure to determine the largest motor which can be used and specific technical data.

3.1 Functional Description

Utilizing a start command (as described in the Product Description) for the self-cleaning cycle, the system is designed to be self-sufficient. There is no need to interfere with the filter as the equipment uses the highest level of technology to control the filter system. Typical start command is given by a differential pressure switch, however a variety of inputs are available for different applications. Consult with your local Regional Sales Manager or Application Engineer for more details on the best controller options for your application.

3.2 Standard Component Description

The following is for the standard controller configuration. Additional control options are available and may enhance the capabilities of your controller. All components are, UL approved, and conform to most international standards.

Disconnect Switch

This disconnect switch is for power isolation. It's capable of handling up to 600V AC.

Contactor and Overloads

The contactor and overload allow the end-user to have full control over the pump/drive motor. From the factory, the pump/drive motor is controlled to either turn on or off with the self-cleaning cycle as appropriate, but is easily modified to accept different logic schemes. The overloads use solid-state technology to determine if the motor is being overdriven. At the factory, these settings are set

and checked before shipment. Raising the overloads current value over the factory settings or removing the overloads from the controls will inhibit the ability of the controller to properly protect the motor. This setting should not be modified without contacting the manufacturer first.

Transformer

The transformer steps the high voltage down to a usable low voltage for the control components. It is protected with fuses on the primary side and circuit breakers on the secondary side. Exchanging the short-circuit protection of the controller should be exact one for one. Never increase the short circuit protection of the controller without consulting the manufacturer first.

Adjustable Flush Interval Timer

This timer allows the end-user to define the minimum self-cleaning/flush cycle interval time. This is very important to ensure efficiency of the filter system. Standard factory setting is to initiate one self-cleaning cycle every day at a minimum. This is a high performance timer with 8A contacts and the ability to set the interval from 0.05 seconds to 60 hours.

Programmable Logic Controller (PLC)

The Programmable Logic Controller (PLC) is designed to handle all of the controls. It is used to simplify the operation, thereby making the overall controller more robust. It has a special program designed by Amiad for this filter system. Although the software is available for download by the manufacturer, the program should not be altered without the consent of Amiad to avoid equipment malfunctions.

Power On Light

This panel face LED light is for local indication that the power is on and the system is running.

Flush Pushbutton

This panel face green pushbutton is used to initiate a system self-cleaning or flush cycle, providing the operator with a local means of self-cleaning/flushing the system.

Fault Reset Pushbutton and Light

This panel face red pushbutton and LED light is used to indicate when a fault has occurred (see Fault Conditions section for more detail) and the pushbutton function is used to clear a fault condition when the issue has been corrected and the system is ready to resume normal operation.

3.3 Transportation

The system can only be transported with the Disconnect Switch turned to the off position, and the power isolated.

3.4 Communication

The Amiad Controller allows for basic communication using standard dry-contacts for connecting to the end-user's facility controller. Standard communication includes:

- Major Fault dry contact
- Motor On dry contact

If the end-user requires additional logic to incorporate the filter into their system, additional inputs are available. Refer to the schematic for the following:

- Remote Start of the self-cleaning cycle – Allows the control panel to run in the Automatic mode, self-cleaning/flush cycle will be initiated by differential pressure or time.
- Remote Stop of the equipment - If the filter is in self-cleaning mode, it will terminate the operation, and return to filtering mode until the next self-cleaning cycle is initiated.)

4. Operation

4.1 Initial Operation

- Always use the appropriate Personal Protective Equipment (PPE) when working with electrical components.
- With the electrical source isolated, connect the appropriate electrical connections to the Amiad Controller. Check on the data plate to ensure the appropriate power supply is connected.
- Add necessary short circuit protection as required on schematic.
- Ensure pump is appropriately supplied with water.
- Ensure Stop connections are installed.
- Check the motor data plate and ensure that the motor overloads are set to the FLA on the data plate.
- Check to make sure that circuit breakers within panel are switched to the off position.
- Before switching power on to the panel, use a meter to ensure the correct voltage is being supplied to the panel.
- Close the disconnect switch to the on position to supply power to the panel.
- Before switching circuit breakers on, check voltages on the secondary of the transformer to ensure the correct voltage.
- Apply power to the control circuit by switching on the circuit breakers.
- Check configuration of Inputs and Outputs if applicable.
- Check timers to ensure appropriate self-cleaning/flush parameters.
- Check for leaks within the filter pipes and valves and tighten if necessary as described in the filter O&M.

4.2 Deactivation

- Turn disconnect switch to the off position.

- Turn all circuit breakers to the off position.
- Apply appropriate lock-out/tag-out measures to ensure that power is not accidentally switched on.

5. Electro-mechanical Controls

Standard settings are set at the factory. These settings are specific to the customer's application. There is, however, a wide range of flexibility with this product.

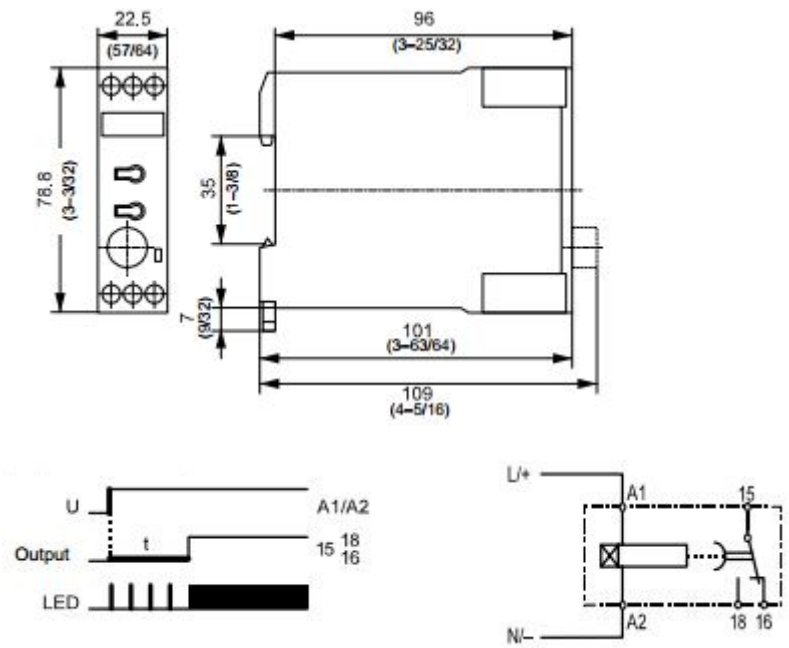

The image above is the timing chart for the Flush Interval Timer.

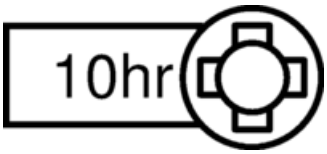

The adjustable Interval Timer has a small dial for adjusting timing settings in 12 convenient larger ranges, and a larger dial for adjusting through the specific range for both timers.

Setting the controller
Configuración del controlador
Réglage du régulateur

Large Dial number Número de marcación grande Un grand nombre de numérotation	**Actual Time** Tiempo real Temps réel
0.17	30s
0.33	60s
0.67	120s
1.00	180s

Set the large dial on TR1 to get the appropriate flush time.
Ajuste el dial grande en TR1 para obtener el tiempo de lavado adecuado.
Réglez le grand cadran sur TR1 pour obtenir le temps de rinçage approprié.

Small Dial Number Pequeño número de marcación Petit numéro d'appel	**Large Dial number** Número de marcación grande Un grand nombre de numérotation	**Actual Time** Tiempo real Temps réel
1h	.5	30m
1h	1.0	1h
3h	1.0	3h
10h	.8	8h
60h	.4	24h

Set the dials on TR2 to get the flush interval time.
Ajuste los selectores de TR2 para obtener el tiempo de intervalo de vaciado.
Régler les cadrans sur TR2 pour obtenir l'intervalle de temps de chasse.

Set the overload(s) according the FLA on the motor data plate.
Establezca la sobrecarga (s) de acuerdo a la FLA en la placa de datos del motor.
Réglez la surcharge (s) selon la FLA sur la plaque signalétique du moteur.

6. Fault Conditions

There are two different types of faults conditions:

1. A Minor Fault is a condition in which the filter can still continue operating in the current condition, but has a fault that needs to be corrected. The red Reset Fault light will blink during this condition.
2. A Major Fault is a condition in which the filter cannot continue to operate and a self-cleaning/flush cycle cannot be operated properly. They system will be shut-down (filter and pump if included). The red Reset Fault light will glow continuously during this condition.

Minor Fault indication is caused by a mechanical fault which is the failure of the filter suction scanner (SAF, EBS and Omega filter systems) to complete its travel (monitored by limit or proximity switches). The Minor Fault condition will continue until a self-cleaning/flush cycle is initiated, at which time the Minor Fault will become a Major Fault as a self-cleaning/flush cycle cannot be started with this fault occurring.

There are two standard filter Major Faults and one Major Fault which can occur when a suction pump is used during the self-cleaning/flush cycle:

1. Differential Pressure Fault - the self-cleaning/flush cycle has not been able to clear the differential pressure for a programmed period of time (factory set at 240 seconds). The differential pressure must be cleared by power flushing the filter system or by manually cleaning the filter element(s). The fault can then be cleared by pushing the Fault Reset button.
2. Overload Fault - the motor current has exceeded the setting on the overload. Pushing the reset button alone will not affect this fault condition. The overload will have to be reset on the device and then the Fault Reset button can be pushed to clear the fault condition.
3. Suction Pump Fault - the flow switch placed after the suction pump did not engage after a period of time or flow dropped off during the self-cleaning/flush cycle. The suction pump must be inspected and repaired if necessary or flow restrictions to the pump fed must be removed. Once the flow conditions are corrected, the Fault Reset button can be pushed to clear the fault condition.

The Major Alarm dry contact will only be activated during a Major Alarm condition and not by Minor Fault conditions.

Appendix 1 – Pump IOM

MOTORS AND DRIVES

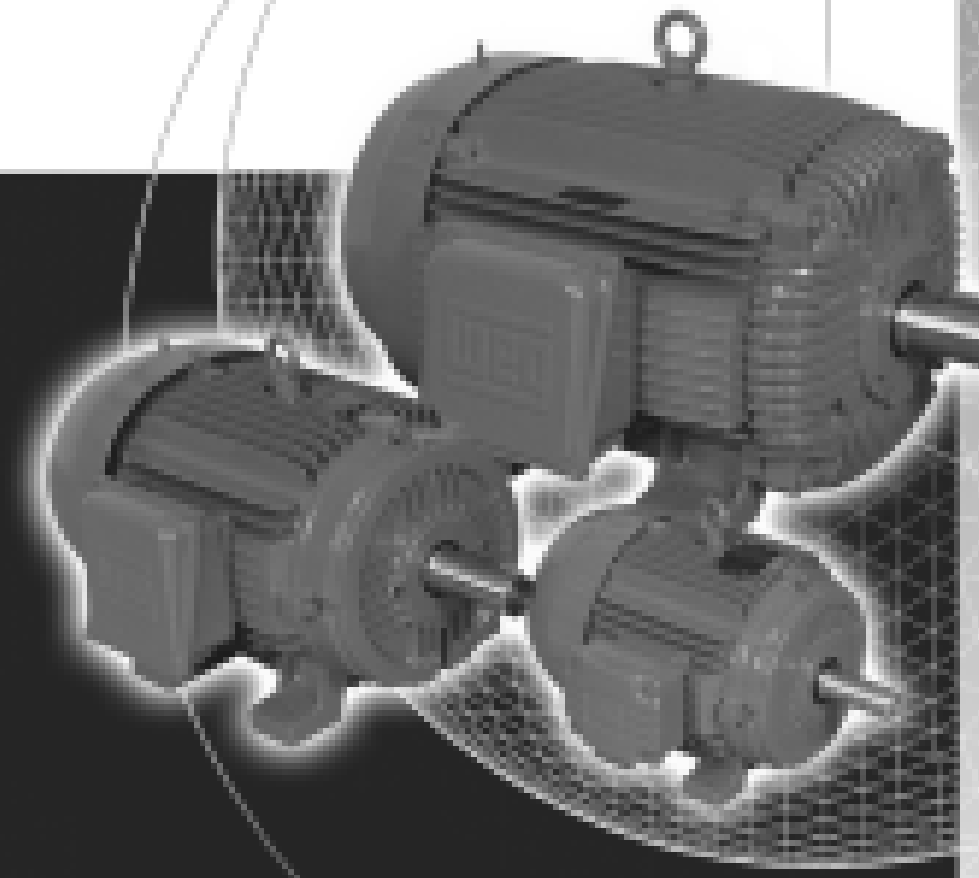

INSTALLATION AND MAINTENANCE INSTRUCTIONS FOR ELECTRIC MOTORS

Frames 143/5T - 586/7T

QUALITY SYSTEM ISO 9001 WEG MOTORES

BVQI ISO 9001

UKAS QUALITY MANAGEMENT

READ CAREFULLY THIS MANUAL BEFORE INSTALLING THE MOTOR.

RECEIVING CHECK

- ✓ Check if any damage has occured during transportation.
- ✓ Check nameplate data.
- ✓ Remove shaft locking device (if any) before operating the motor.
- ✓ Turn the shaft with the hand to make sure if it is turning freely.

HANDLING AND TRANSPORTATION

1 - General

MOTORS MUST NOT BE LIFTED BY THE SHAFT, BUT BY THE EYE BOLTS WHICH ARE PROPERLY DESIGNED TO SUPPORT THE MOTOR WEIGHT.

Lifting devices, when supplied, are designed only to support the motor. If the motor has two lifting devices then a double chain must be used to lift it.

Lifting and lowering must be done gently without any shocks, otherwise the bearings can get damaged.

DURING TRANSPORTATION, MOTORS FITTED WITH ROLLER OR ANGULAR CONTACT BEARINGS ARE PROTECTED AGAINST BEARING DAMAGES WITH A SHAFT LOCKING DEVICE.

THIS LOCKING DEVICE MUST BE USED ON ANY FURTHER TRANSPORT OF THE MOTOR, EVEN WHEN THIS MEANS TO UNCOPULE THE MOTOR FROM THE DRIVEN MACHINE.

STORAGE

If motors are not immediately installed, they must be stored in dry places, free of dust, vibrations, gases, corrosive smokes, under constant temperature and in normal position free from other objects.

In case the motors are stored for more than two years, the bearings must be changed or the lubrication grease must be totally replaced after cleaning.

Single phase motors when kept in stock for 2 years or more must have their capacitors replaced (if any).

We recommend to turn the shaft (by hands) at least once a month, and to measure the insulation resistance before installing it, in cases of motors stored for more than 6 months or when subject to high humidity areas.

If motor is fitted with space heaters, these should be switched on.

Insulation Resistance Check

Measure the insulation resistance before operating the motor and/or when there is any sign of humidity in the winding.

The resistance measured at 25°C (77ºF) must be:

Ri > (20 x U) / (1000 + 2P) [Mohm] (measured with a MEGGER at 500 V d.c.); where U = voltage (V); P = power (kW).

If the insulation resistance is less than 2 megaohms, the winding must be dried according to the following:
✓ Warm it up inside an oven at a minimum temperature of 80°C (176ºF) increasing 5°C (41ºF) every hour until 105°C (221ºF), remaining under this temperature for at least one hour. Check if the stator insulation resistance remains constant within the accepted values. If not, stator must be reimpregnated.

INSTALLATION

1 - Safety

All personnel involved with electrical installations, either handling, lifting, operation or maintenance must be well informed and up-to-dated concerning the safety standard and principles that govern the work and carefully follow them.

We strongly recommend that these jobs are carried out by qualified personnel.

MAKE SURE THAT THE ELECTRIC MOTORS ARE SWITCHED OFF BEFORE STARTING ANY MAINTENANCE SERVICE.

Motors must be protected against accidental starts.

When performing any maintenance service, disconnect the motor from the power supply. Make sure all accessories have been switched off and disconnected.

Do not change the regulation of the protecting devices to avoid damaging.

LEAD CONNECTION IN SULATION INSIDE THE TERMINAL BOX MUST BE DONE WITH AN INSULATING MATERIAL COMPATIBLE WITH MOTOR THERMAL CLASS WHICH IS SHOWN ON THE MOTOR NAMEPLATE.

2 - Operating Conditions

Electric motors, in general, are designed for operation at an altitude of 1000m above sea level for an ambient temperature between 25°C (77°F) and 40°C (104°F). Any variation is stated on the nameplate.

COMPARE THE CURRENT, VOLTAGE, FREQUENCY, SPEED, OUTPUT AND OTHER VALUES DEMANDED BY THE APPLICATION WITH THE DATA GIVEN ON THE NAMEPLATE.

Motors supplied for hazardous locations must be installed in areas that comply with that specified on the motor nameplate.

KEEP AIR INLET AND OUTLET FREE AND CLEAN. THE AIR BLOWN OUT BY THE MOTOR SHALL NOT ENTER AGAIN. THE DISTANCE BETWEEN THE AIR INLET AND THE WALL MUST BE AROUND ¼ OF THE INLET OPENING DIAMETER.

3 - Foundation

Motors provided with feet must be installed on though foundations to avoid excessive vibrations.

The purchaser is fully responsible for the foundation.

Metal parts must be painted to avoid corrosion.

The foundation must be uniform and sufficiently tough to support any short circuit strengths. It must be designed in such a way to stop any vibration originated from resonance.

4 - Drain Holes

Make sure the drains are placed in the lower part of the motor when the mounting configuration differs from that specified on the motor purchase order.

5 - Balancing

WEG MOTORS ARE DYNAMICALLY BALANCED, WITH HALF KEY AT NO LOAD AND UNCOUPLED.

Transmission elements such as pulleys, couplings, etc must be dynamically balanced with half key before installation. Use always appropriate tools for installation and removal.

6 - Alignment

ALIGN THE SHAFT ENDS AND USE FLEXIBLE COUPLING, WHENEVER POSSIBLE.

Ensure that the motor mounting devices do not allow modifications on the alignment and further damages to the bearings.

When assembling a half-coupling, be sure to use suitable equipment and tools to protect the bearings.

Suitable assembly of half-coupling: check that clearance Y is less than 0.05mm and that the difference X1 to X2 is less than 0.05m as well.

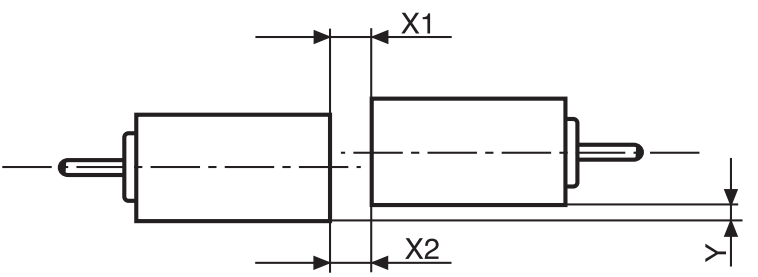

Note: The“X” dimension must be at least 3mm.

7 - Belt Drive

When using pulley or belt coupling the following must be observed:
✓ Belts must be tighten just enough to avoid slippage when running, according to the specifications stated on the belt supplier recommendation.

WARNING:
Excessive tension on the pulleys will damage the bearings and lead to a probable shaft rupture.

8 - Connection

WARNING: Voltage may be connected at standstill inside the terminal box for heating elements or direct winding heating.

WARNING: The capacitor on single-phase motors can retain a charge which appears across the motor terminals, even when the motor has reached standstill.

A WRONG CONNECTION CAN BURN THE MOTOR.

Voltage and connection are indicated on the nameplate. The acceptable voltage variation is ± 10%, the acceptable frequency variation is ± 5% and the total acceptable variation is ± 10%.

9 - Starting Methods

The motor is rather started through direct starting. All Weg motors must be connected as shown on the motor nameplate, failure to follow the motor nameplate could lead to motor failure.

In case this is not possible, use compatible methods to the motor load and voltage.

✓ 3 lead single voltage and 9 lead dual voltage motors can be started as follows:
Full Voltage Direct On Line.
Auto-Transformer Starting.
Electronic Soft-Starting.
VFD Starting - subject to verification and application analysis.

✓ 6 lead single voltage motors and 12 lead dual voltage motors can be connected as follows:
Full Voltage Direct On Line.
WYE/DELTA Starting.
Auto-Transformer Starting.
Electronic Soft-Starting.
VFD Starting - subject to verification and application analysis.

The rotation direction is clockwise if the motor is viewed from DE side and if the phases are connected according to the sequence L1, L2, L3.

To change the rotation direction, interchange two of the connecting leads.

THE CONNECTION TO THE POWER SUPPLY MUST BE DONE BY QUALIFIED PERSONNEL AND WITH FULL ATTENTION TO ASSURE A SAFE AND PERMANENT CONNECTION. AFTER CONNECTING THE MOTOR, CHECK FOR ANY STRANGE BODY INSIDE THE TERMINAL BOX. THE CABLE INLETS NOT IN USE MUST BE CLOSED.

Make sure to use the correct cable dimension, based on the rated current stamped on the motor nameplate.

BEFORE ENERGIZING THE TERMINALS, CHECK IF THE EARTHING IS MADE ACCORDING TO THE ACTUAL STANDARDS. THIS IS ESSENTIAL AGAINST ACCIDENT RISKS.

When the motor is supplied with protective or monitor temperature device such as thermostats, thermistors, thermal protector, etc, connect their terminals to the corresponding devices on the control panel.

10- Start-Up

THE KEY MUST BE FASTENED OR REMOVED BEFORE STARTING THE MOTOR.

a) The motor must start and operate smoothly. In case this does not occur, turn it off and check the connections and the mounting before starting it again.

b) If there is excessive vibration, check if the fastening screws are correctly fastened. Check also if the vibration comes from a neighbour machine. Periodical vibration checks must be done.

c) Run the motor under rated load for a short period of time and compare if the running current is equal to that stamped on the nameplate.

MAINTENANCE

WARNING:
SAFETY CHECK LIST.

1 - General Inspection

- ✓ Check the motor periodically.
- ✓ Keep the motor clean and assure free air flow.
- ✓ Check the seals or V Ring and replace them, if required.
- ✓ Check the connections as well as supporting screws.
- ✓ Check the bearings and observe:
  Any excessive noise, bearing temperature and grease condition.
- ✓ When a changing, under normal conditions, is detected, check the motor and replace the required parts.
  The frequency of the inspections depends on the motor type and on the application conditions.

LUBRICATION

FOLLOW THE REGREASING INTERVALS. THIS IS FUNDAMENTAL FOR PROPER MOTOR OPERATION.

1 - Machines without Grease Nipples

Motors up to frame 324/6T are normally fitted without grease nipples. In these cases the regreasing shall be done at the preventive maintenance job observing the following aspects:

✓ Disassemble carefully the motors.
✓ Take all the grease out.
✓ Wash the bearing with querosene or diesel.
✓ Regrease the bearing immediately.

2 - Machines Fitted with Grease Nipples

It is strongly recommended to grease the machine while running. This allows the grease renewal in the bearing housing. When this is not possible due to turning parts by the grease device (pulleys, bushing, etc) that offer some risk to the physical integrity of the operator, proceed as follows:

✓ Clean the area near to the grease nipple.
✓ Put approximately half of the total grease and run the motor for 1 minute at full speed. Then turn off the motor and pump the rest of the grease.
✓ The injection of all the grease with the motor in standstill can make the grease penetrate into the motor, through the inner seal of the bearing housing.

When regreasing, use only special bearing grease with the following properties:

RELUBRICATION INTERVALS RECOMMENDED - POLYREX® EM GREASE (ESSO/EXXON)

Frame	Amount of grease (g)	3600 rpm	3000 rpm	1800 rpm	1500 rpm	1200 rpm	1000 rpm	900 rpm	750 rpm	720 rpm	600 rpm	500 rpm
Relubrication intervals in hours - ball bearings												
254/6T	*13*	*15700*	*18100*	*20000*	*20000*	*20000*	*20000*	*20000*	*20000*	*20000*	*20000*	*20000*
284/6T	*18*	*11500*	*13700*	*20000*	*20000*	*20000*	*20000*	*20000*	*20000*	*20000*	*20000*	*20000*
324/6T	*21*	*9800*	*11900*	*20000*	*20000*	*20000*	*20000*	*20000*	*20000*	*20000*	*20000*	*20000*
364/5T	*27*	*3600*	*4500*	*9700*	*11600*	*14200*	*16400*	*17300*	*19700*	*20000*	*20000*	*20000*
404/5TS	*27*	*3600*	*4500*	*9700*	*11600*	*14200*	*16400*	*17300*	*19700*	*20000*	*20000*	*20000*
444/5TS	*27*	*3600*	*4500*	*9700*	*11600*	*14200*	*16400*	*17300*	*19700*	*20000*	*20000*	*20000*
504/5TS	*27*	*3600*	*4500*	*9700*	*11600*	*14200*	*16400*	*17300*	*19700*	*20000*	*20000*	*20000*
586/7TS	*27*	*3600*	*4500*	*9700*	*11600*	*14200*	*16400*	*17300*	*19700*	*20000*	*20000*	*20000*
Relubrication intervals in hours - cylindrical roller bearings												
324/5T	*21*	*9800*	*11900*	*20000*	*20000*	*20000*	*20000*	*20000*	*20000*	*20000*	*20000*	*20000*
364/5T	*27*			*9700*	*11600*	*14200*	*16400*	*17300*	*19700*	*20000*	*20000*	*20000*
404/5T	*34*			*6000*	*7600*	*9500*	*11600*	*13800*	*15500*	*15500*	*17800*	*20000*
444/5T	*45*			*4700*	*6000*	*7600*	*9800*	*12200*	*13700*	*13700*	*15700*	*20000*
447/5T	*45*			*4700*	*6000*	*7600*	*9800*	*12200*	*13700*	*13700*	*15700*	*20000*
504/5T	*45*			*4700*	*6000*	*7600*	*9800*	*12200*	*13700*	*13700*	*15700*	*20000*
586/7T	*60*			*3300*	*4400*	*5900*	*7800*	*10700*	*11500*	*11500*	*13400*	*17300*

WARNING:

The table above is specifically intended for relubrication with Polyrex® EM grease and bearing absolute operating temperature of:

✓ 70°C (158°F) for 254/6T to 324/6T frame motors;
✓ 85°C (185°F) for 364/5T to 586/7T frame motors.

For every 15°C (59°F) above these limits, relubrication interval must be reduced by half.

Shielded bearing (ZZ) are lubricated for berings life as long as they operate under normal ambient conditions and temperature of 70°C(158°F).

WE RECOMMEND TO USE BALL BEARINGS FOR MOTORS DIRECTLY COUPLED TO THE LOAD.

WARNING:
EXCESS OF GREASE CAN CAUSE BEARING OVERHEATING RESULTING IN COMPLETE DAMAGE.

Compatibility of Polyrex® EM grease with other types of grease:

Containing polyurea thickener and mineral oil, the Polyrex® EM grease is compatible with other types of grease that contain:

- ✓ Lithium base or complex of lithium or polyurea and highly refined mineral oil;
- ✓ Inhibitor additive against corrosion, rust and anti-oxidant additive.

Notes:

- ✓ Although Polyrex® EM is compatible with the types of grease given above, we do no recommend to mix it with any other greases.
- ✓ If you intend to use a type of grease different than those recommended above, first contact WEG.
- ✓ On applications (with high or low temperatures, speed variation, etc), the type of grease and relubrication interval are given on an additicional nameplate attached to the motor.
- ✓ Vertical mounted motors must have the relubrication intervals reduced by half.

THE USE OF STANDARD MOTORS IN SPECIFIC AREAS OR SPECIAL APPLICATIONS MUST BE DONE BY CONSULT TO THE GREASE MANUFACTURER OR WEG.

ASSEMBLY AND DISASSEMBLY

Disassembly and assembly must be done by qualified personnel using only suitable tools and appropriated methods. The stator grips must be applied over the side face of the inner ring to be disassembled or over and adjacent part.

It is essential that the bearings disassembly and assembly be done under cleanning conditions to ensure good operation

and to avoid damages. New bearings shall only be taken out from their cases when assembling them.

Before installing a new bearing it is required to check the shaft fitting for any sharp edge or strike signals.

For bearing assembly, warm their inner parts with suitable equipment - inductive process - or use suitable tools.

SPARE PARTS

When ordering spare parts, please specify the full type designation and product code as stated on the motor nameplate.

Please also inform the motor serial number stated on the nameplate.

MOTORS FOR HAZARDOUS LOCATIONS

Besides the recommendations given previously, these ones must be also followed:

THE SPECIFICATION OF THE MOTOR INSTALLATION PLACE IS FOR CUSTOMER'S RESPONSIBILITY, WHO WILL ALSO DETERMINE THE ENVIRONMENT CHARACTERISTICS.

Motors for hazardous locations are manufactured according to specific standards for such environments and they are certified by worldwide certifying entities.

1 - Installation

The complete installation must follow procedures given by the local legislation in effect.

THE INSTALLATION OF HAZARDOUS LOCATION MOTORS MUST BE CARRIED OUT BY SKILLED PEOPLE, AND THE THERMAL PROTECTION MUST BE ALWAYS INSTALLED, EITHER INSIDE OR OUTSIDE THE MOTOR, OPERATING AT THE RATED CURRENT.

2 - Maintenance

Maintenance must be carried out by repair shops authorized by WEG.

Repair shops and people without WEG's authorization who will perform any service or hazardous location motors will be fully responsible for such service as well as for any consequential damage.

ANY ELECTRICAL OR MECHANICAL MODIFICATION MADE ON HAZARDOUS LOCATION MOTORS WILL VOID THE CERTIFICATION.

When performing maintenance, installation or relubrication, follow these instructions:

- ✓ Check if all components are free of edges, knocks or dirt.
- ✓ Make sure all parts are in perfect conditions.
- ✓ Lubricate the surfaces of the endshield fittings with protective oil to make the assembly easier.
- ✓ Use only rubber hammer to fit the parts.
- ✓ Check for correct bolts tightening.
- ✓ Use clearance calibrator for correct T-box fitting (smaller than 0.05mm).

DO NOT REUSE DAMAGED OR WORN PARTS. REPLACE THEM BY NEW ONES SUPPLIED BY THE FACTORY.

MOTORS DRIVEN BY VFD

Applications using VFD´s without filter can affect motor performance as follows:

- ✓ Lower efficiency.
- ✓ Higher vibration.
- ✓ Higher noise level.
- ✓ Higher rated current.
- ✓ Higher temperature rise.
- ✓ Reduced motor insulation.
- ✓ Reduced bearing life.

1 - Standard Motors

- ✓ Voltages lower than 440V do not require filter.
- ✓ Voltages equal or higher than 440V or lower than 575V require filter for motor power supply cables longer than 20 meters.
- ✓ Voltages equal or higher than 575V require filter for any size of power supply cables.

IF SUCH RECOMMENDATIONS ARE NOT FOLLOWED ACCORDINGLY, MOTOR WARRANTY WILL BE VOID.

2 - Inverter Duty Motors

- ✓ Check power supply voltage of the forced cooling set.
- ✓ Filters are not required.

WARRANTY TERMS
SERIES AND ENGINEERING PRODUCTS

WEG warrants its products against defects in workmanship and materials for 18 months from the invoice date issued by the factory, authorized distributor or agent limited to 24 months from manufacturing date independent of installation date as long as the following items are fulfilled accordingly:

- Proper transportation, handling and storage;

- Correct installation based on the specified ambient conditions and free of corrosive gases;

- Operation under motor capacity limits;

- Observation of the periodical maintenance services;

- Repair and/or replacement effected only by personnel duly authorized in writing by WEG;

- The failed product be available to the supplier and/or repair shop for a required period to detect the cause of the failure and corresponding repair;

- Immediate notice by the purchaser about failures occured and that these are accepted by WEG as manufacturing defects.

This warranty does not include disassembly services at the urchaser facilities, transportation costs with product, tickets, accomodation and meals for technical personnel when requested by the customer. The warranty service will be only carried out at WEG Authorized Repair Shops or at WEG´s facilities.

Components whose useful life, under normal use, is shorter than the warranty period are not covered by these warranty terms.

The repair and/or replacement of parts or components, when effected by WEG and/or any WEG Authorized Repair Shop, will not give warranty extension.

This constitutes WEG´s only warranty in connection with this sale and the company will have no obligation or liability whatsoever to people, third parties, other equipment or installations, including without limitation, any claims for consequential damages or labor costs.